RIVACOLD
MASTERING COLD

BEST W R290

Wall-mounted packaged unit for coldrooms

EN **Instruction manual | v. 01**
Instructions translated from the original

DANGER! Anyone who uses this machine is obliged to read these instructions for their own safety.

Ownership of information

Copyright © 2021, Rivacold srl

All rights reserved in all countries.

Any distribution, modification, translation or reproduction of parts or all the document is prohibited unless written authorization is given by Rivacold srl with the exception of the following:

- Print the document in its original form, in whole or in part.
- Transfer the document to websites or other electronic systems.
- Copy the content unmodified and indicating Rivacold srl as the copyright holder.

Rivacold srl reserves the right to make changes or improvements to the relative documentation without prior notice.

Requests for authorizations, additional copies of this manual or technical information about it, must be addressed to:

Rivacold srl
Montecchio - via Sicilia, 7
61022 Vallefoglia (PU)
Italia
info@rivacold.com
www.rivacold.com
+39 0721 919911

Contents

Warranty and assistance 5
Conformity 5

1. Introduction 6
1.1 Identification data 6
1.2 Information about the instruction manual .. 7

2. Safety 9
2.1 General safety warnings 9
2.2 Personnel skills 10
2.3 Residual risks 10
2.4 Safety labels 12
2.5 Fixed guards 13
2.6 Noise 14

3. Learning about the packaged unit for coldrooms 15
3.1 Limits of use 15
3.2 Overview 15
3.3 Description of the packaged unit 16
3.4 Packaged unit operation 22

4. Transport and handling 23
4.1 Handling warnings 23
4.2 Transport and handling 24

5. Installation 25
5.1 Installation warnings 25
5.2 Setting the packaged unit in place 26
5.3 Installation requirements 27
5.4 Install the BEST WS (saddle) 27
5.5 Install the BEST W (with plug-in insulating panel) 29
5.6 Install the BEST WT (with the pre-fitted plug-in insulating panel) 32
5.7 Secure the door switch 33
5.8 Connect the packaged unit to the electrical mains 34
5.9 Work area and operational tasks 34

6. Start-up 36
6.1 Control panel 36
6.2 Control panel operations 37
6.3 Setting the date and time 38
6.4 Using the MY I.D. App 41
6.5 The passwords 45

6. Use 46
6.6 Setting the date and time 46

7. Quick menu 50
7.1 Description of the Quick menu 50
7.2 View the input and output state 50
7.3 Download and upload 53
7.4 Alarm log 54
7.5 HACCP alarm log 55
7.6 System information 57
7.7 Lock and unlock the control panel 57

8. Parameters 59
8.1 Connecting to the micro USB port 59
8.2 Structure of the parameters menu 60
8.3 Changing a parameter 61
8.4 Configuration parameters 63
8.5 Service parameters 66
8.6 Regulation parameters 66
8.7 Compressor parameters 67
8.8 Condenser parameters 68
8.9 Defrost parameters 69
8.10 Evaporator fan parameters 71
8.11 Electronic valve parameters 72
8.12 Electronic valve protections 73
8.13 Coldroom light and door switch parameters 75
8.14 Parameters of the alarms 76
8.15 General function parameters 81
8.16 General setting parameters 84

9. Maintenance 88
9.1 Maintenance warnings 88
9.2 Maintenance and cleaning performed by the operators 89

9.3 Periodic maintenance 90
9.4 Corrective maintenance 91
9.5 Remove the front panel 91
9.6 Checking or replacing condensing unit components 92
9.7 Checking or replacing evaporating part components 95
9.8 Check or replace components of the electrical box 96

10. Diagnostics 98

10.1 Installation and operation troubleshooting 98
10.2 Errors indicated by the controller 100

11. Appendix 113

11.1 Decommissioning 113
11.2 Technical features 115
11.3 Basic configurations 118
11.4 Attachments 119
11.5 Time zones 119

Warranty and assistance

Warranty terms

RIVACOLD srl guarantees the product against any material or manufacturing defects for **one year from the registration date of the packaged unit (see "Register the packaged unit using the QR code" on page 42 or "Register the packaged unit using the numeric code" on page 43) as long as it is registered within three months from the invoice date. If it is not registered, the date of issue of the sales invoice will apply.**

If defects in materials or workmanship are noted during this period, RIVACOLD srl will repair or replace the defective components under the terms and conditions set out below, with no charge for labor or spare parts. The expenses to ship the packaged unit to the Customer Assistance Service are charged to the Customer.

Compensation will not be acknowledged for damage, of any kind, which the customer should be required to pay third parties for.

> ***Note**: the warranty is only valid if the defects are claimed within the indicated time frames.*

Warranty exclusions

The following are excluded from the warranty:

- periodic maintenance operations
- damage resulting from improper use, including but not limited to:
  - incorrect power supply
  - using the product for purposes other than those intended
  - repairs carried out by unauthorized personnel or by the Customer himself
- defects resulting from modifications, adaptations or repairs made to the product by the Customer or by unauthorized personnel
- fortuitous and accidental events, such as falls and infiltration of liquids
- natural events and malicious or negligent actions

Post-warranty assistance

After the warranty time frames have elapsed, assistance will be provided by RIVACOLD srl with a charge for the replaced parts and labor and transport expenses in force at the time.

Warranty invalidation

The warranty is immediately invalidated if the model or serial number indicated on the product has been modified, deleted, removed or anyhow made illegible.

Assistance

> ***Note**: for information on warranty terms, contact RIVACOLD srl.*

In case of a malfunction or fault or to find out about the terms of the warranty, the exclusions, the forfeiture of the warranty and how to apply the warranty and request assistance, contact Rivacold srl or the dealer in the relevant zone.

Conformity

4.0.1 Declaration of conformity

Conformity CE

Directives List of Directives for which the product is declared to be conforming:

- 2014/68/EU (Pressure Equipment Directive)
- 2014/35/EU (Low Voltage Directive)
- EMC 2014/30/EU (Electromagnetic Compatibility Directive)
- 2006/42/EC (Machinery Directive)
- RED 2014/53/EU (Radio Equipment Directive)

> ***Note**: the original declaration of conformity accompanies the machine.*

1. Introduction

This section includes the following topics:

1.1 Identification data 6
1.2 Information about the instruction manual 7

1.1 Identification data

1.1.1 Manufacturer's contacts

RIVACOLD srl
Montecchio - via Sicilia, 7
61022 Vallefoglia (PU)
Italia
Tel: +39 0721 919911
Fax: +39 0721 490015
e-mail: info@rivacold.com

1.1.2 Identification

The information on the identification plates is important for requesting assistance, maintenance or spare parts.

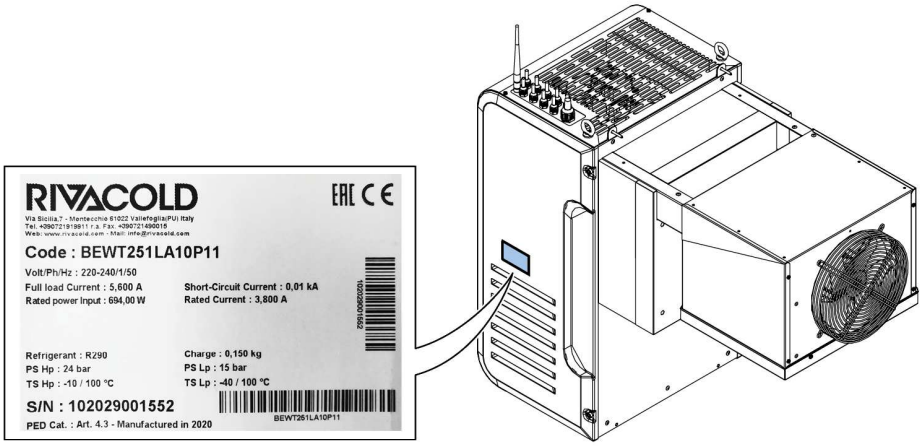

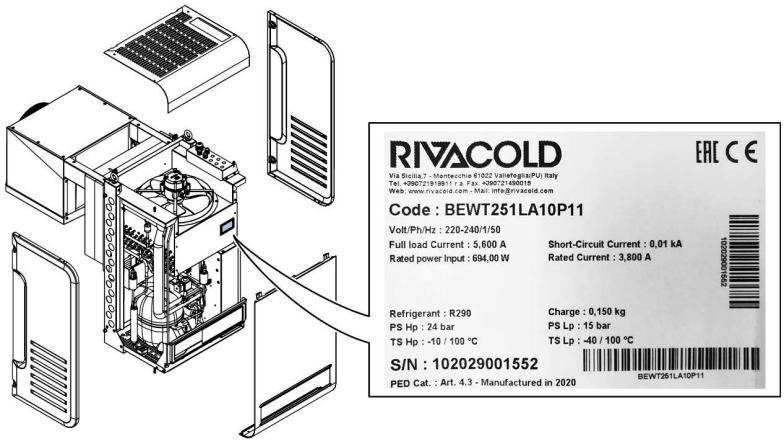

1.1.3 Code legend

BE	Range. **BE**: BEST
WT/ WS	**WT** (trough wall): with plug-in insulating panel fitted or removed **WS**: wall saddle
25/ 30/ 35	Housing/frame dimensions. **25**: for condensing unit fan with a 254 diameter, **30**: for condensing unit fan with a 300 diameter, **35**: for condensing unit fan with a 350 diameter
1/ 2	Number of compressors
M/ L	Application. **M**: medium temperature, **L**: low temperature
A/ W/ L	Type of condensation. **A**: air
10 - 80	Progressive number that identifies the different power outputs
P	Refrigerant gas. **P:** R290
1	Laminating part. **1**: mechanical thermostatic
1/ 2	Voltage. **1**: one-phase, **2**: three-phase
G/W	IoT. **G**: 2G Connection, **W**: Wi-Fi Connection
00	Progressive number for options

1.2 Information about the instruction manual

1.2.1 Objectives of the instruction manual

These instructions guide the personnel in charge of installing, using and servicing the packaged unit safely.

1.2.2 Obligations with respect to this instruction manual

***NOTICE**: This instruction manual is an integral part of the packaged unit and must be kept for its entire life cycle.*

It must be stored in a clean place and kept in good condition to be accessible to the operators. If the manual is lost or damaged, contact RIVACOLD srl. If the packaged unit is sold, always attach the instruction manual.

1.2.3 Data of the instruction manual

Packaged unit: BEST W R290

Title: Instruction manual

Code: 9600-0033

Month and year of publication: 05-2021

Type of manual: translation of original instructions istruzioni originali

1.2.4 Safety messages

Below are the warnings related to user safety and damage to the machine provided in this document:

DANGER! indicates a hazardous situation which, if not avoided, will result in death or serious injury.

WARNING! indicates a hazardous situation which, if not avoided, can result in death or serious injury.

CAUTION! indicates a hazardous situation which, if not avoided, can result in slight injury.

***NOTICE**: indicates obligations which, if not complied with, can damage the device.*

1.2.5 Other messages

***Note**: neutral and positive information that emphasizes or adds information to the main text. It provides information that can only be applied in special cases.*

1.2.6 Figures and illustrations

The figures and illustrations in this instruction manual are only used for reference and may differ in detail and proportions from the actual product.

1.2.7 Updates of the instruction manual

Code	Publication date	Updates
9600-0033	05-2021	Second publication
	12-2020	First publication

1.2.8 Documentation provided

Manual	Recipients	Code	Date
Instruction manual (this manual)	The personnel indicated in "Personnel skills" on page 10.	9600-0033 - 05-2021	05-2021

2. Safety

This section includes the following topics:

2.1 General safety warnings 9
2.2 Personnel skills 10
2.3 Residual risks 10
2.4 Safety labels 12
2.5 Fixed guards 13
2.6 Noise 14

2.1 General safety warnings

2.1.1 Obligations for the employer

The employer must select, train and appoint authorized personnel to carry out their duties.

It is the employer's responsibility to instruct the personnel in charge and to enforce the safety regulations for every specific task. The employer must also define the operating procedures and ensure that they comply with the instruction manual provided by the manufacturer. See "Personnel skills" on the next page for more information.

2.1.2 Obligations for the recipients of the instruction manual

***NOTICE**: anyone who uses this packaged unit is obliged to read this instruction manual for their own safety.*

2.1.3 Recipients of this instruction manual

This instruction manual is intended for personnel authorized by the employer to install, use and service the packaged unit.

2.1.4 Clothing

Do not wear loose clothing, ties, chains and watches that can get caught in the moving parts of the packaged unit.

2.1.5 Personal protective equipment

Equipment	Stage
	During lifting and transport
	During installation and commissioning
	During use
	During maintenance or dismantling

2.2 Personnel skills

2.2.1 Preamble

Every section of this instruction manual is preceded by the skills that the personnel in question must have. Not having these skills can:

- endanger the safety of personnel
- invalidate the warranty

***Note**: the operator's tasks are defined by the complexity of the operations and their level of experience and skill. Operators must collaborate with the technicians to receive operating instructions or to request adjustment operations.*

2.2.2 List of skills

Symbol	Operations allowed	Skills
COMPANY **Manufacturer's personnel**	All operations	Technical personnel employed or authorized by the manufacturer.
Mechanical maintenance engineer	• Installation and decommissioning of the packaged unit • Maintenance excluding works on the electrical system • Solving problems that cause blockages	Has the Italian Refrigeration Technician License. Has extensive technical knowledge in the mechanical and pneumatic fields. Understands the technical drawings and the refrigerating diagram.
Electrical maintenance engineer	• Electrical connections during installation and decommissioning of the packaged unit • Solving problems that cause faults in the electrical system	Has extensive technical knowledge in the electrical field. Understands the wiring diagrams and works inside electrical boxes, junction boxes and control equipment in the presence of voltage. Understands the refrigerating diagram.
Operator	• Operate using the commands • Clean the packaged unit • Adjust the equipment after receiving the relevant instructions • Change certain parameters but only after receiving the relevant instructions	Has general technical knowledge and experience in managing the packaged unit.
Driver	Lifting and handling	Authorized to use means to lift and handle materials and equipment according to the laws in force in the country of installation.

2.3 Residual risks

2.3.1 Definition

A danger zone is any area inside or outside the packaged unit where a person is exposed to the risk of serious or minor injuries.

Every procedure described in this instruction manual indicates the possible risks. Always follow the instructions in the instruction manual to avoid damage or injury.

- Follow the warnings given in this instruction manual concerning installation.
- Follow the instructions for adjustment, cleaning and maintenance given in this instruction manual.

2.3.2 Preamble

The packaged unit has been designed and built to function, be adjusted and subjected to maintenance without these operations exposing the personnel in charge to risks if carried out according to the instructions given in this instruction manual. The adopted measures minimize the risk of accidents throughout the life cycle of the packaged unit, both in the context of the intended use and of reasonably foreseeable misuse.

2.3.3 Mechanical residual risks

Risk	When it occurs	How to avoid it
Bruising and superficial abrasion	During installation, cleaning, maintenance and dismantling.	Wear the personal protective equipment.
Crushing	During transportation, lifting, installation and dismantling.	• Always use lifting equipment and accessories of adequate capacity for the load to be lifted. • Prevent UNAUTHORIZED people from accessing the area near the packaged unit. • Follow the warnings given in this instruction manual concerning lifting. • Check that the wall where the packaged unit is installed is suitable for supporting the packaged unit.
Falling from above	During installation, maintenance at a height and dismantling.	Always use adequate means and accessories.
Impact	During installation, cleaning and maintenance.	Wear the personal protective equipment.
High pressure fluid ejection	During maintenance and dismantling.	Maintenance on pressurized circuits must only be performed by the mechanical maintenance engineer.
Contact with moving and sharp parts	During maintenance.	• Wear the personal protective equipment. • Isolate the packaged unit from the power supply.

2.3.4 Electrical residual risks

Risk	When it occurs	How to avoid it
Electrocution	During installation, connection, maintenance and dismantling.	• The electrical connection and disconnection must only be carried out by the electrical maintenance engineer. • Wear the personal protective equipment.

2.3.5 Thermal residual risks

Risk	When it occurs	How to avoid it
Low temperatures	During maintenance in the coldroom.	• Wear the personal protective equipment. • Follow the instructions for adjustment, cleaning and maintenance given in this instruction manual. • Take work breaks to prevent long exposure to excessively low temperatures.
Burns	During and immediately after use.	Wear the personal protective equipment.

2.3.6 Chemical residual risks

Risk	When it occurs	How to avoid it
Explosion and fire	During transport and handling, installation, cleaning and maintenance.	Follow the regulations in force and the warnings on adjustments and maintenance given in this instruction manual.
Burns	During transport and handling, installation, cleaning and maintenance.	Follow the regulations in force and the warnings on adjustments and maintenance given in this instruction manual.

2.4 Safety labels

2.4.1 General warnings

Clean the labels if dirty and replace them if detached or damaged.

DO NOT apply other labels or notes that can hide the indications affixed by the manufacturer or make them partially illegible.

2.4.2 Position of the safety stickers

The position of the stickers is as follows:

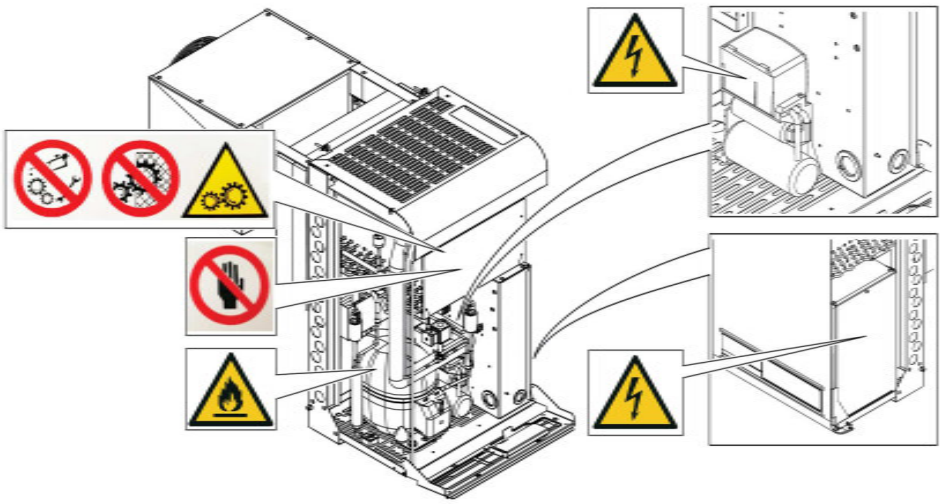

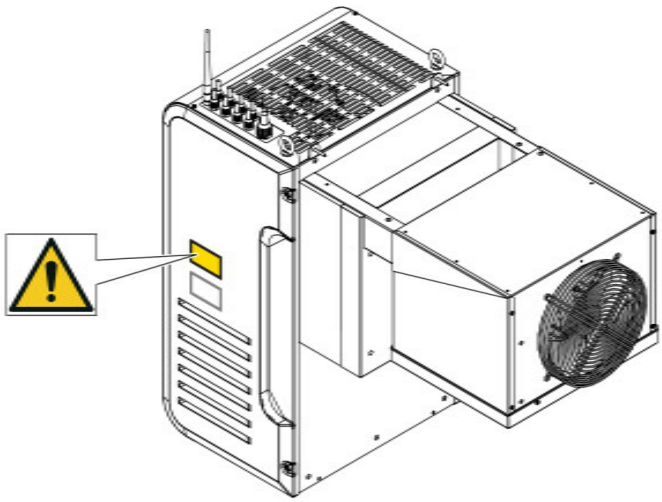

Symbol	Description
	Do not repair moving parts
	Do not remove safety devices
	Moving parts
	Do not use your hands to clean the condenser
	Flammable gas
	Electrocution
	Disconnect the power supply before performing maintenance.

2.5 Fixed guards

2.5.1 Fixed guards of the condensing unit

The fixed guards of the condensing unit consist of the side panels **[A]**, the front panel **[B]**, the top panel **[C]** and, internally, the electrical box panel **[D]**.

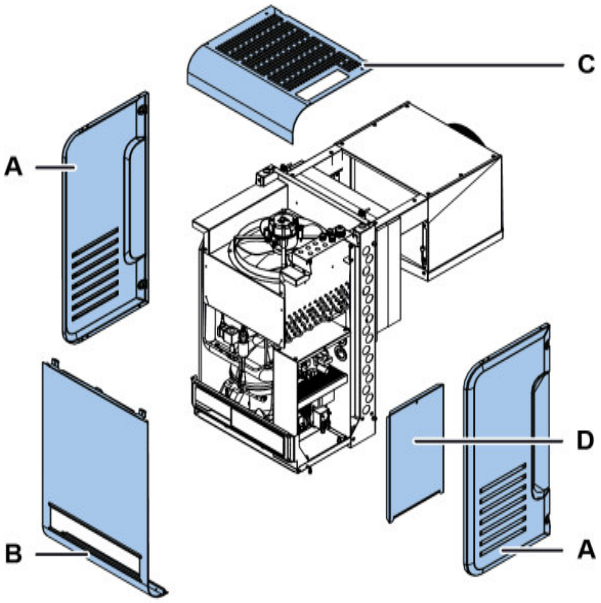

2.5.2 Fixed guards of the evaporating part

The fixed guards of the evaporating part consist of the side panels **[A]** and the grid **[B]**.

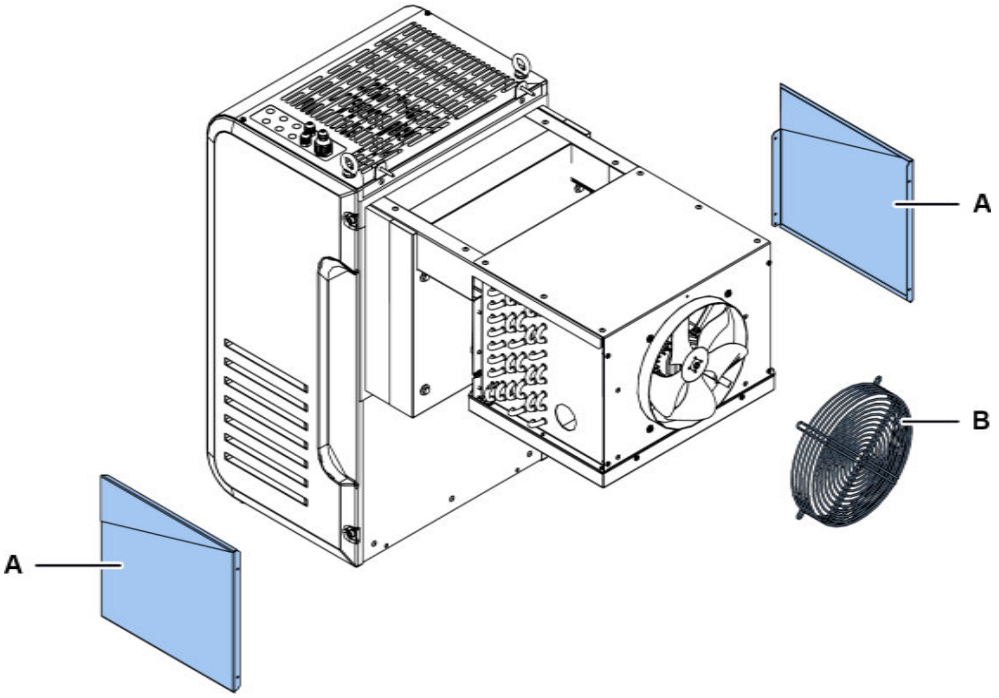

2.6 Noise

2.6.1 Sound pressure level

The sound pressure measured while the packaged unit is running is less than 70 dB(A) LEX and/or 135 dB(C) Lpeak.

3. Learning about the packaged unit for coldrooms

This section includes the following topics:

3.1 Limits of use 15
3.2 Overview 15
3.3 Description of the packaged unit 16
3.4 Packaged unit operation 22

3.1 Limits of use

3.1.1 Intended use

BEST W R290 is a packaged unit for small-sized coldrooms with electronic fan-motors and a water, air or Water Loop condenser.

3.1.2 Unintended use

This packaged unit has been designed for all the uses declared in "Intended use" above.

In particular, with this packaged unit it is NOT possible to:

- Install the packaged unit on a sloping or horizontal wall
- Install the packaged unit on a wall with different structural characteristics than those intended
- Install the packaged unit on a ceiling or floor
- Install the packaged unit on a refrigeration coldroom with different characteristics from those intended
- Use a different refrigerant gas than that intended
- Use the packaged unit without the protections
- Apply labels or notes that can hide the indications provided with the packaged unit or make them partially illegible
- Tamper with the electrical equipment and/or safety devices
- Set the packaged unit with different values than those indicated by the manufacturer
- Climb on or cling to the packaged unit

3.1.3 Work environment

The packaged unit CANNOT be used in the following conditions:

- Environments with a potentially explosive atmosphere (ATEX)
- Environments with vapors deriving from chemical processes
- Environments with the presence of radiation (ionizing and non)
- Environments with temperatures outside of the +5°C to +43°C range
- Environments subject to potential fire hazards (see the local standards and regulations applied at national level)
- Environments with poor ventilation
- Outdoors (installation), exposed to the atmospheric agents

3.2 Overview

3.2.1 Packaged unit configurations

The packaged unit is available in different configurations. The variants are:

- type of installation: saddle, with plug-in insulating panel removed and with plug-in insulating panel fitted
- refrigeration temperature range:
  - NT (normal temperature): -5 °C ≤ Tcoldroom ≤ +10 °C
  - LT (low temperature): -25 °C ≤ Tcoldroom ≤ -15 °C

3.2.2 Circuits of the packaged unit

Depending on the model, the packaged unit can be single-circuit or dual-circuit. The circuits are totally independent of each other. Every circuit is a compact and hermetically sealed system in accordance with the definitions set forth in UNI EN 378-1. The amount of refrigerant for every circuit is ≤ 150 g to allow installation to take place anywhere without restrictions, as required by the reference standard.

Note: Rivacold cannot be held liable for any restrictions due to national or regional regulations or laws.

3.2.3 Optional extras

The packaged unit options are as follows:

- control panel with remote interface
- IoT connection

3.3 Description of the packaged unit

3.3.1 BEST WS components for saddle installation

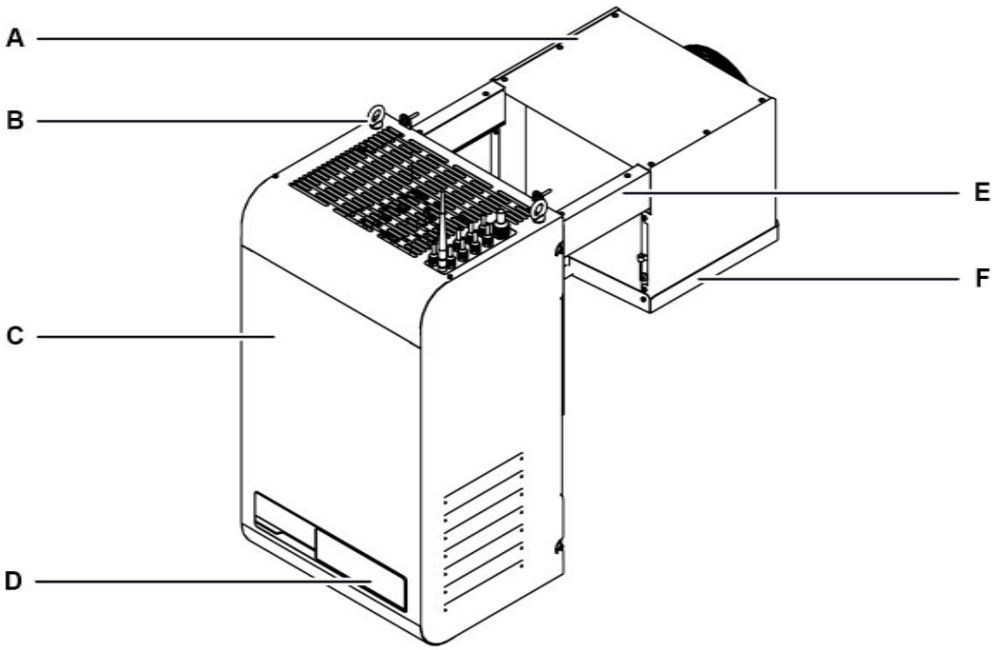

Part	Description
A	Evaporating part
B	Eyebolts
C	Condensing unit
D	Control panel
E	Brackets
F	Evaporator tray

3.3.2 BEST W components for installation with plug-in insulating panel removed

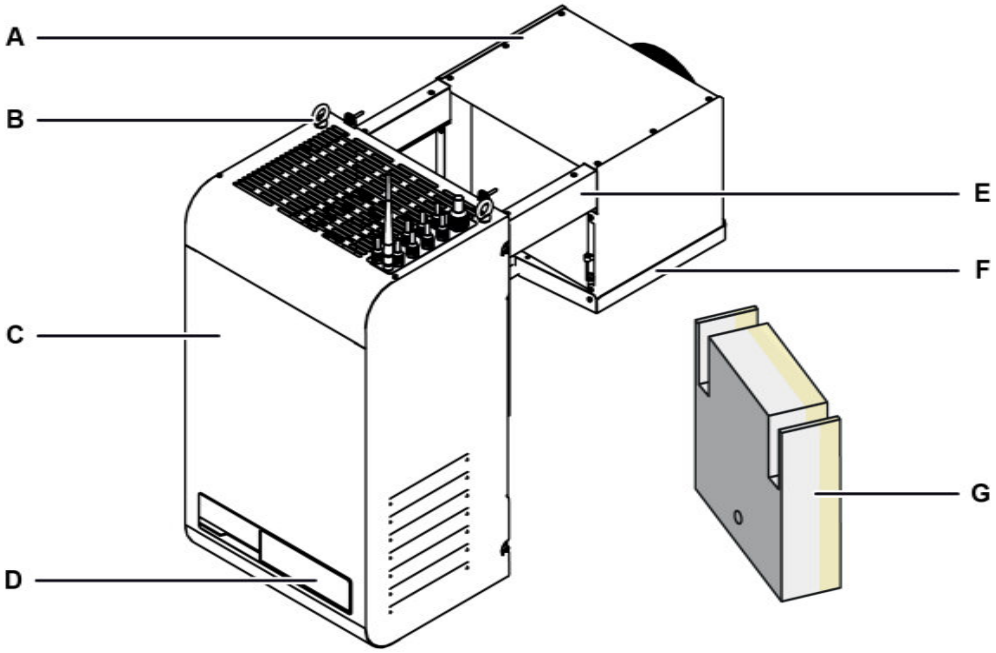

Part	Description
A	Evaporating part
B	Eyebolts
C	Condensing unit
D	Control panel
E	Brackets
F	Evaporator tray
G	Plug-in insulating panel

3.3.3 BEST WT components for installation with the plug-in fitted

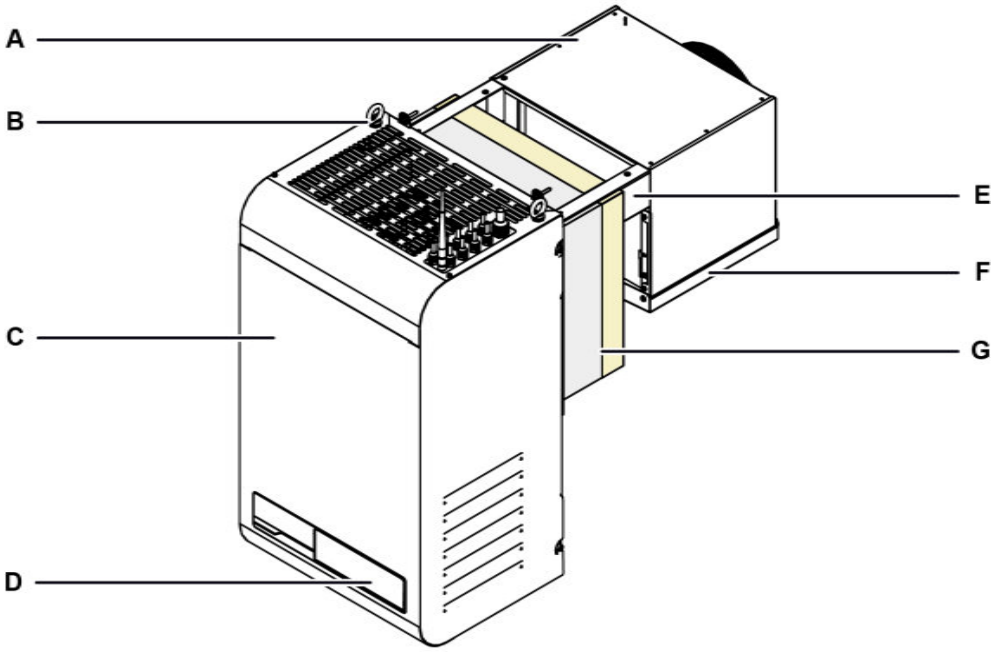

Part	Description
A	Evaporating part
B	Eyebolts
C	Condensing unit
D	Control panel
E	Brackets
F	Evaporator tray
G	Plug-in insulating panel

3.3.4 Internal components

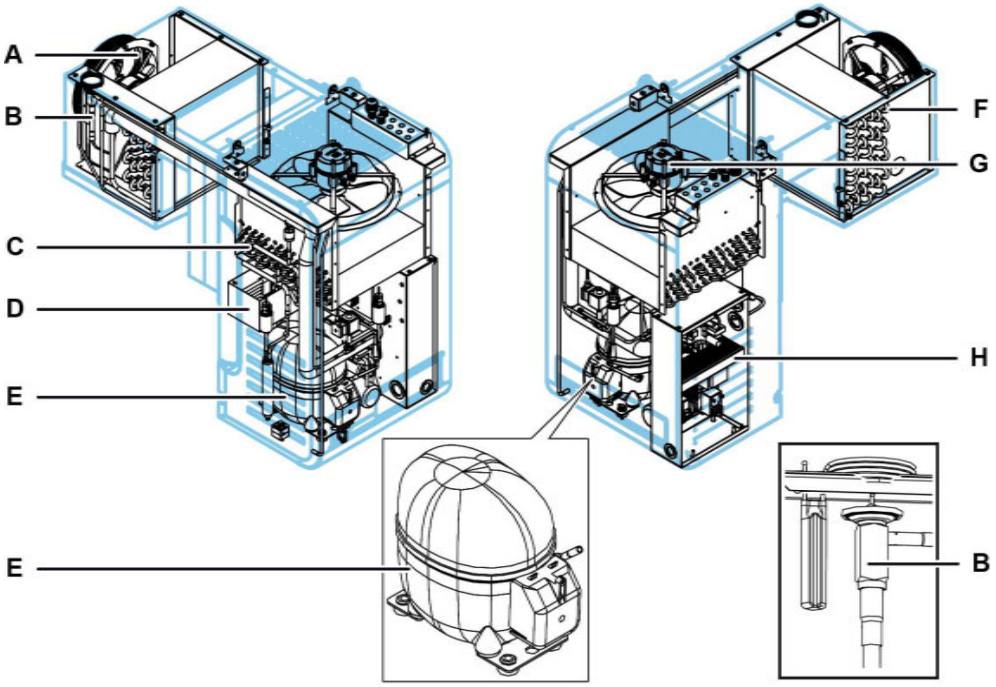

Part	Description
A	Ventilation unit of the evaporating part
B	Thermostatic valve
C	Condenser
D	Condensate drain tray
E	Compressor
F	Evaporator
G	Condensing unit ventilation unit
H	Electrical box

3.3.5 Components of the control panel

Part	Description
A	Display
B	Interface on the machine

3.3.6 Connections

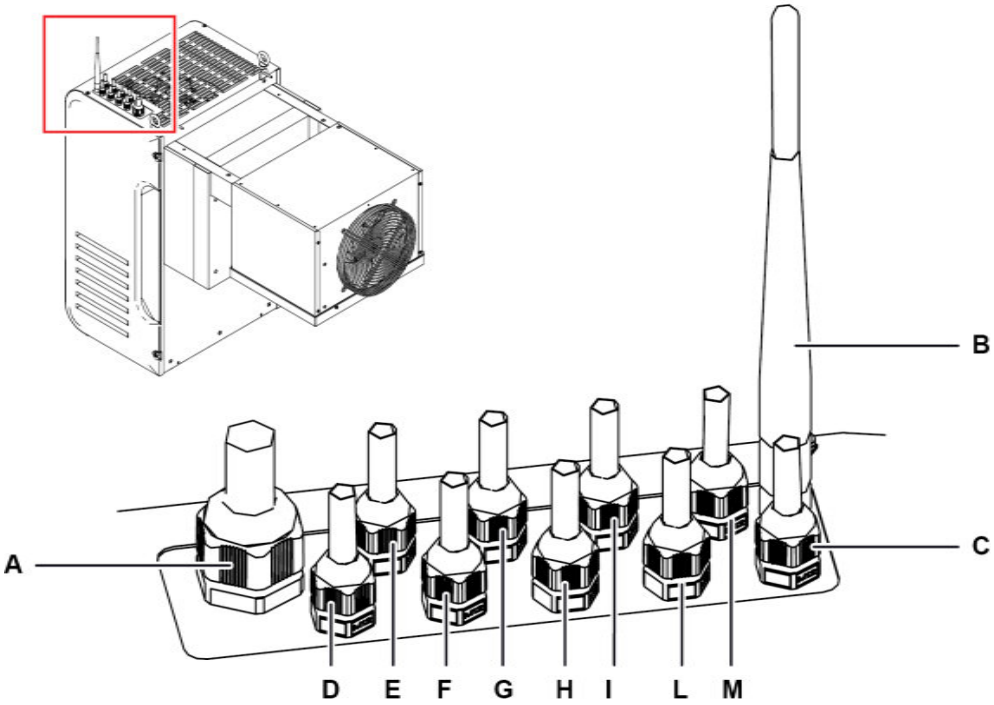

Part	Description
A	Power supply
B	Wi-Fi IoT gateway antenna
C	BMS (Building Management System)
D	Refrigeration coldroom light
E	Alarm
F	Door heater (only for low temperature)
G	Free position
H	2G IoT gateway antenna
I	Master & slave
L	Remote control panel
M	Door switch

3.3.7 USB port connection

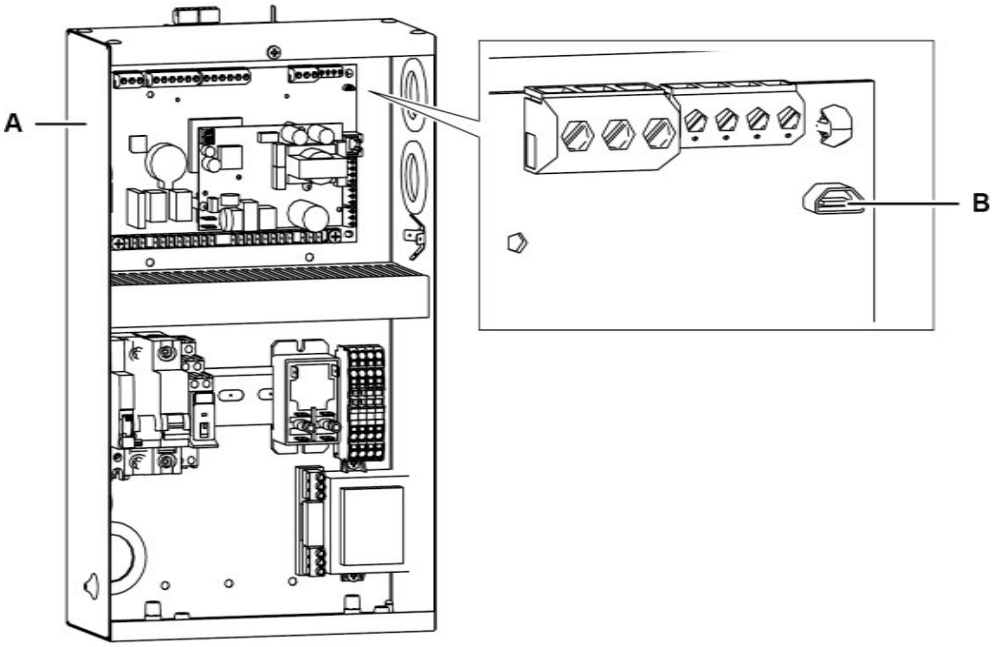

Part	Description
A	Electrical box
B	USB micro port

3.3.8 Door switch components

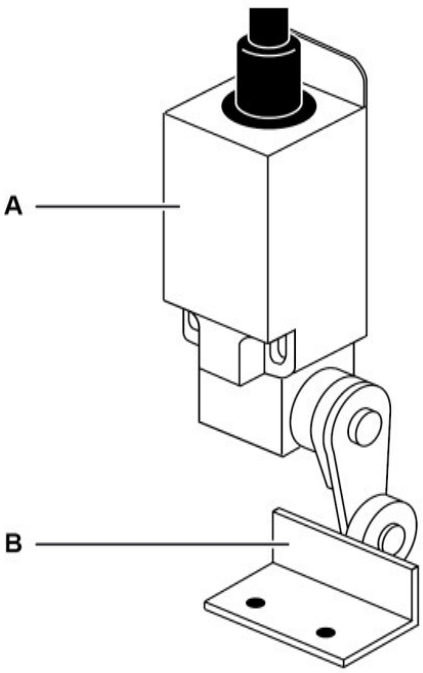

Part	Description
A	Door switch
B	Retainer

3.4 Packaged unit operation

3.4.1 General operation

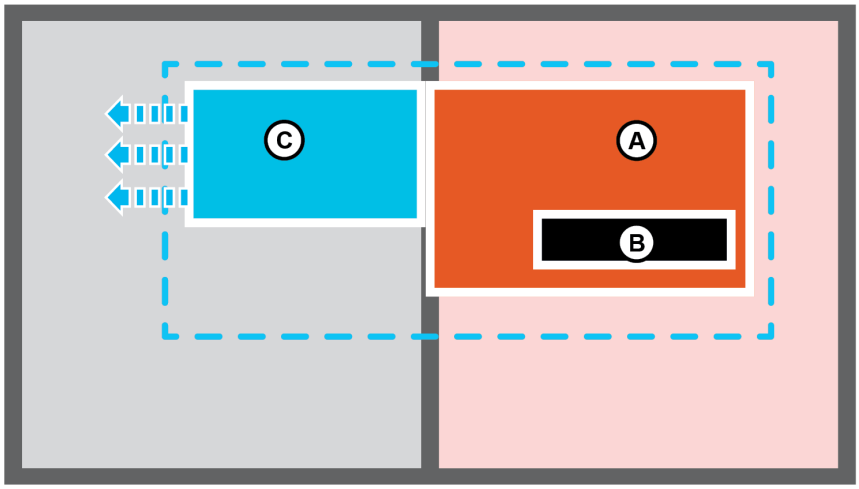

The packaged unit is a refrigeration unit consisting of a condensing unit **[A]** and a controller **[B]** outside the refrigeration coldroom and an evaporating part **[C]** placed inside. The controller manages the refrigeration and defrost cycles.

The refrigeration cycle is the compression type and the refrigerant gas is condensed and evaporated cyclically.

Defrosting is the hot gas type and takes place automatically with cyclic frequency that can be changed by the user or fully automatically using the Smart Defrost function, which can also be activated manually.

3.4.2 Operation of the MY I.D. App

Within the App you can access the following sections:

- **News**: to know the news and events of the Rivacold world.
- **Select**: to know all the Rivacold products.
- **Documents**: to download the sales and technical documentation relating to Rivacold products.
- **My Vision**: to have access to the cloud through which it is possible to monitor and control the operation of every packaged unit. The IOT service must be purchased to have access to this area
- **Smart Control**: to control and command the packaged unit using the mobile device connected via Bluetooth, instead of the interface on the machine.
- **Contacts**: to know and find the closest Rivacold sales contact person.

4. Transport and handling

This section includes the following topics:

4.1 Handling warnings 23
4.2 Transport and handling 24

4.1 Handling warnings

4.1.1 Required skills

	Driver

4.1.2 Safety

DANGER! Explosion/Burn. Presence of flammable gas. During transport and handling, adopt all the precautions required by the legislation in force.

WARNING! Crushing. Always use lifting equipment and accessories of adequate capacity for the load to be lifted. Use the personal protective equipment. Follow the warnings given in this instruction manual concerning lifting.

***NOTICE**: there is oil in the machine. Always handle in an upright position.*

4.1.3 Choosing lifting equipment and accessories

The following general indications apply to load lifting operations and also concern the use of lifting accessories not supplied with the packaged unit. Choose lifting equipment and accessories according to the dimensions, weight and shape of the load to be lifted.

4.1.4 Preliminary checks

- Check that the lifting accessories are intact.
- Check that there are no people or objects in the maneuvering area.
- Check the stability and correct balancing of the load by slowly lifting it slightly.

4.1.5 General warnings

- Due to the presence of oil in the compressor, move the packaged unit while still maintaining the upright position. NEVER overturn the packaged unit.
- Choose the harnessing points so that the load is balanced correctly, considering its center of gravity.
- Monitor the lifting movement from a safe distance. NEVER stand under the load.
- Only guide the load with ropes and hooks.
- If you need to accompany the load with your hands, pull the load. DO NOT push it.
- Lift the load continuously, without jerking or sudden movements.
- After placing the load on the ground, slacken the tension on the tie rods before removing the lifting accessories.

***Note**: the center of gravity is indicated on the packaged unit packaging.*

4.1.6 Lifting angle

The angle between the tie rods changes the applied load according to the following diagram:

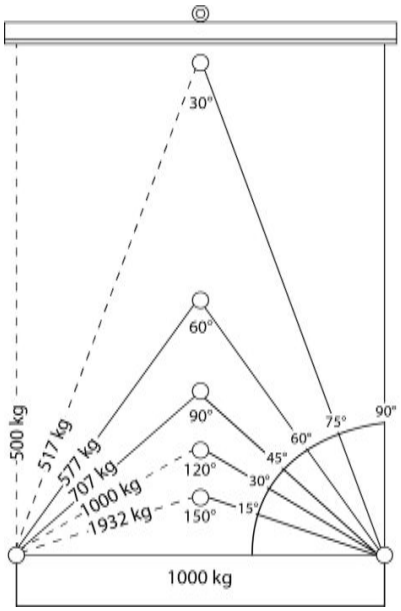

***Note**: we recommend using angles less than 60°.*

4.2 Transport and handling

4.2.1 Transport conditions

The packaged unit is secured and packed in such a way as to prevent movement, impact and damage during transport.

4.2.2 Packaging content

The packaged unit is placed in a single package, complete with all electrical connections. The contents of the packaging are as follows:

- packaged unit
- door switch with retainer
- fastening kit
- template to be used for installation
- coldroom light

4.2.3 Storage

The packed packaged unit must be stored indoors or covered to avoid exposure to atmospheric agents.

4.2.4 Lifting the packaged unit

The center of gravity is indicated on the packaged unit packaging. Use the lifting eyebolts **[A]** on the frame.

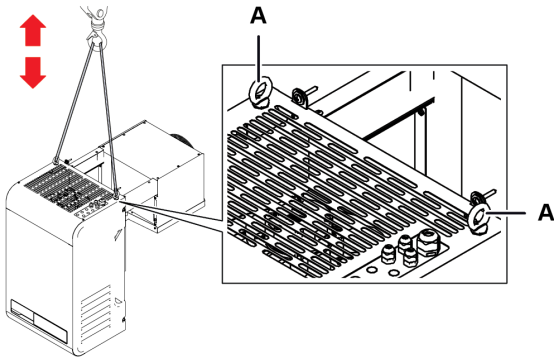

5. Installation

This section includes the following topics:

5.1 Installation warnings 25
5.2 Setting the packaged unit in place 26
5.3 Installation requirements 27
5.4 Install the BEST WS (saddle) 27
5.5 Install the BEST W (with plug-in insulating panel) 29
5.6 Install the BEST WT (with the pre-fitted plug-in insulating panel) 32
5.7 Secure the door switch 33
5.8 Connect the packaged unit to the electrical mains 34
5.9 Work area and operational tasks 34

5.1 Installation warnings

5.1.1 Preamble

Always refer to the information provided when ordering the packaged unit. Contact Rivacold technical assistance to receive specific information for the installation.

5.1.2 Required skills

COMPANY	Manufacturer's personnel
	Mechanical maintenance engineer
	Driver

5.1.3 Safety

DANGER! Explosion/Burn. Presence of flammable gas. The place of installation must have good air circulation and must be far from heat sources, such as naked flames or hot surfaces and from electrical components or flammable materials. During installation, adopt all the precautions required by legislation in force.
Crushing. Always use lifting equipment and accessories of adequate capacity for the load to be lifted and follow the lifting warnings given in this instruction manual.

Falling from above. Always use adequate means and accessories. Provide safe access to the installation area. Follow the warnings given in this instruction manual.

Electrocution. Always use adequate means and accessories. Follow the warnings given in this instruction manual.

5.2 Setting the packaged unit in place

5.2.1 Characteristics of the placement area

NOTICE: The packaged unit must only be installed inside rooms that fully shelter it.

The placement area must have the following characteristics:

- The place of installation must have good air circulation and must be far from heat sources (e.g. naked flames or hot surfaces) and from electrical components or flammable materials
- the wall must be vertical with an adequate surface to support the weight of the packaged unit, even, well leveled and free from vibrations
- the walls of the coldrooms must not be thicker than 200 mm. A 100 mm plug-in insulating panel is supplied as standard for NT units, whereas the standard plug-in insulating panel is 150 mm for LT units.
- the place of installation must have a temperature indicated in "Technical features" on page 115.

5.2.2 Minimum distances of the placement area

The packaged unit must be positioned in a placement area with minimum distances to allow proper air circulation and facilitate maintenance.

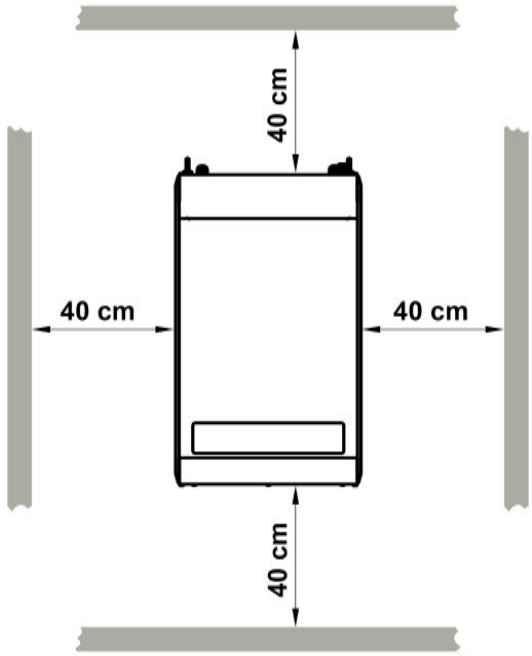

5.2.3 Removing the packaging

***NOTICE**: Environmental contamination. Follow the regulations in force regarding the disposal of polluting materials.*

Remove all packaging and fastening elements used during transport.

5.2.4 Inspections and checks on the packaged unit

Visually inspect the packaged unit to look for any damage caused during transport that could compromise normal operation. Transport damage must be attributed to the carrier and immediately reported to RIVACOLD srl.

5.2.5 Storage

If the packaged unit must be stored for long periods, for example waiting to be relocated, follow the instructions below.

- Isolate the packaged unit from energy sources.
- Clean the packaged unit and all its components.

- Position the packaged unit so that there is sufficient space to pick it up, lift it and move it safely.
- Place the packaged unit indoors and covered with sheets so as to avoid exposure to atmospheric agents.
- Place the packaged unit on a stable, solid supporting surface with characteristics so as to withstand the weight of the packaged unit and the equipment involved
- Place the packaged unit in an environment with specific temperature and humidity conditions

See "Technical features" on page 115 for more information.

5.3 Installation requirements

5.3.1 Stability requirements

Check that the wall where the packaged unit is to be installed is suitable for supporting it.

5.3.2 Requirements for the connection to the electrical mains

The packaged unit is supplied with a power lead and plug.

Comply with the following requirements:

- The voltage and frequency supplied must correspond to those indicated on the identification plate
- Insert a differential circuit breaker (RCD) between the power line and the packaged unit, adequately sized for the application and the laws in force in the country of installation. The switch must be near the packaged unit.

See "Technical features" on page 115.

5.4 Install the BEST WS (saddle)

5.4.1 Result of the installation

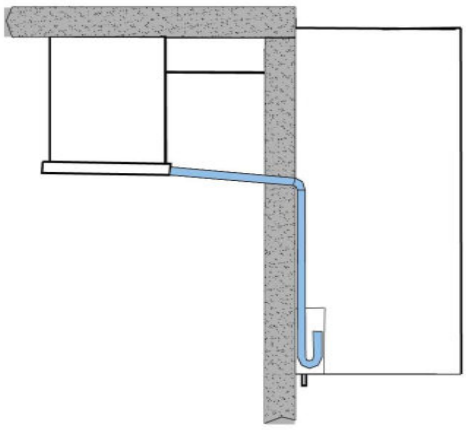

5.4.2 Dimensions of the grooves to be made in the wall

Depending on the dimensions of the packaged unit, make two grooves on the upper end of the coldroom wall. Use the packaging template to proceed more quickly.

BEWS25 Codes	BEWS30 Codes	BEWS35 Codes
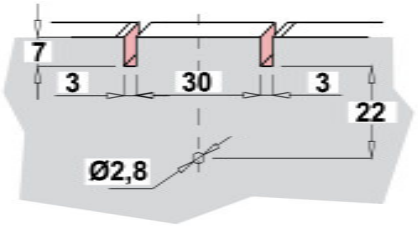	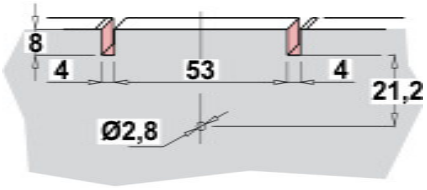	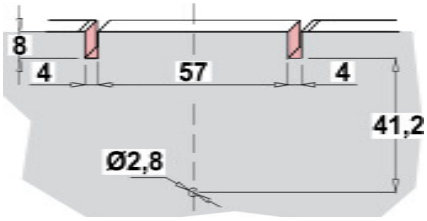

5.4.3 Procedure

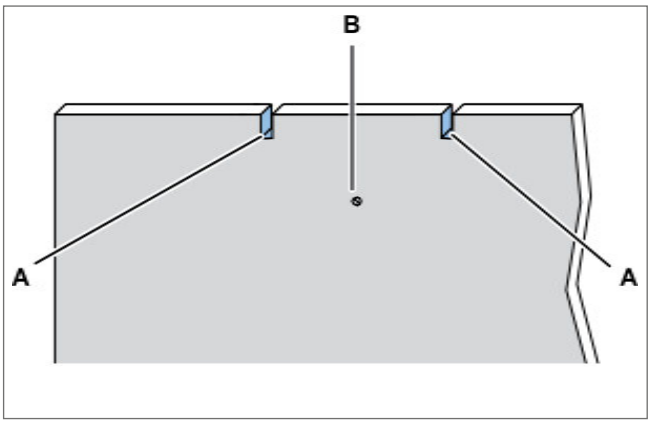

1. Make the grooves **[A]** and a hole **[B]** in the wall to drain water, using the packaging template.

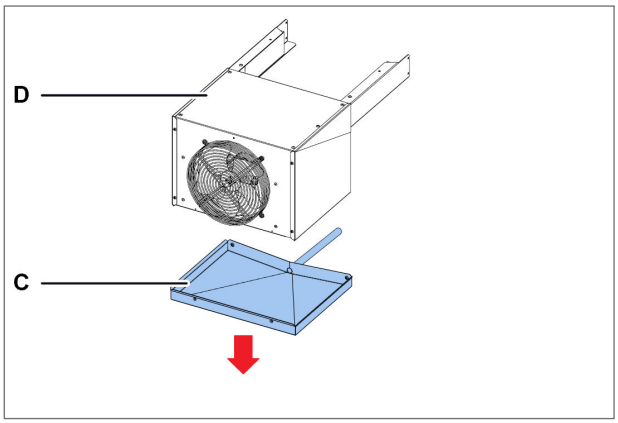

2. Undo the screws of the tray **[C]** and remove it from the evaporating part **[D]**.

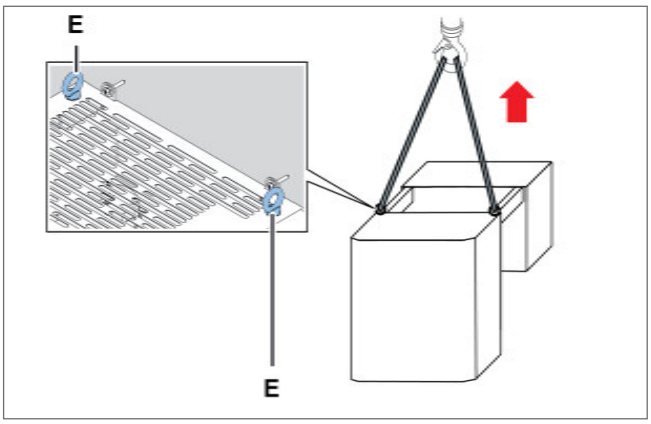

3. Lift the packaged unit using the eyebolts **[E]**.

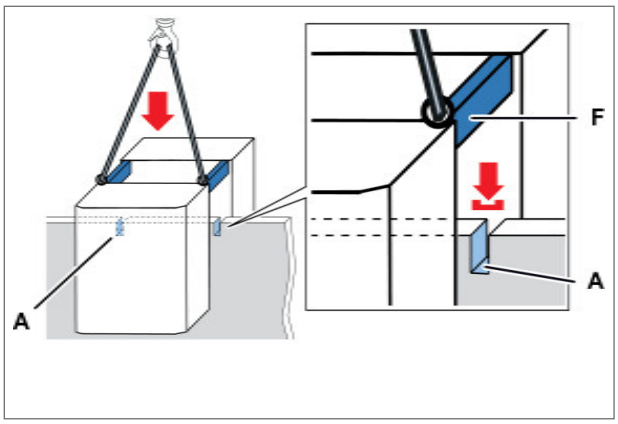

4. Set the packaged unit in place, inserting the brackets **[F]** into the grooves **[A]** of the wall.

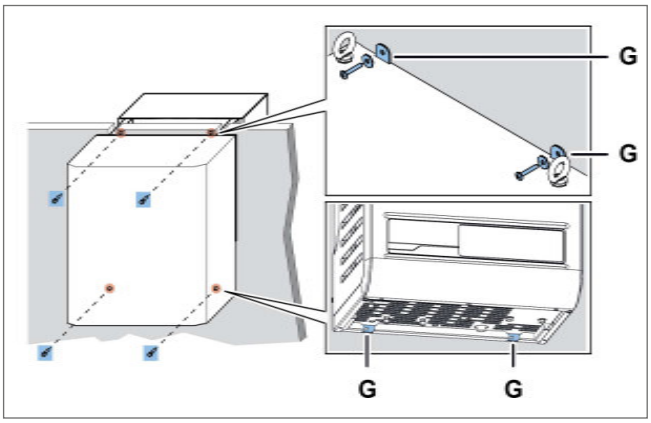

5. Secure the packaged unit to the wall by inserting the screws in the holes **[G]**.

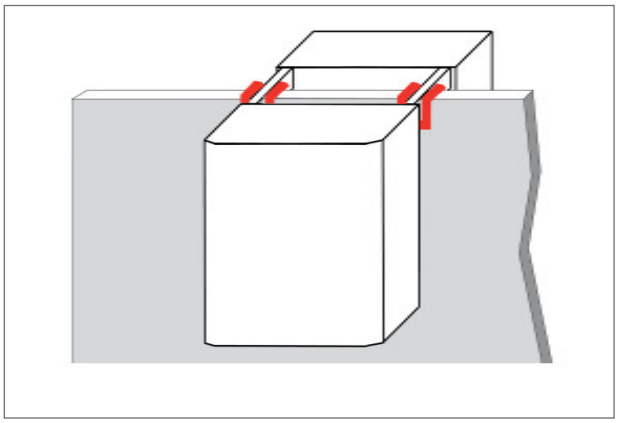

6. Seal the grooves in contact with the packaged unit and the brackets with silicone.

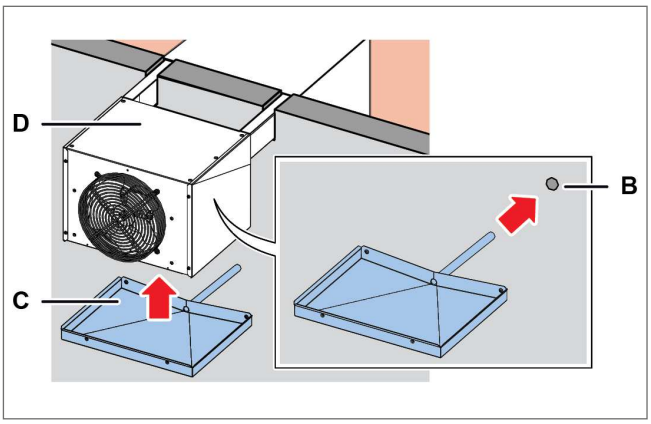

7. Secure the tray **[C]** to the evaporating part **[D]** by inserting the tube in the hole **[B]** of the wall.

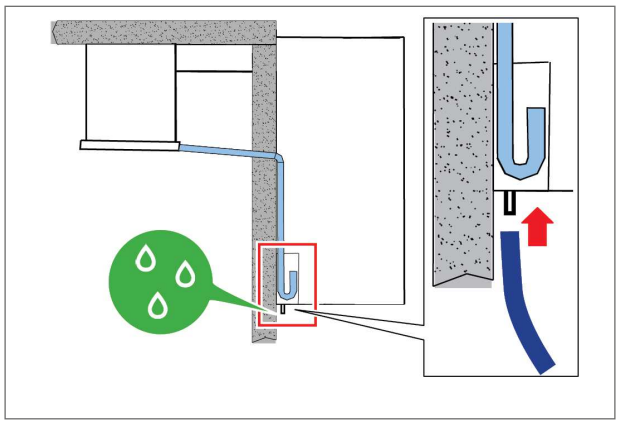

8. Connect the overflow tube to drain the condensate.
9. Install the door switch (see "Secure the door switch" on page 33).

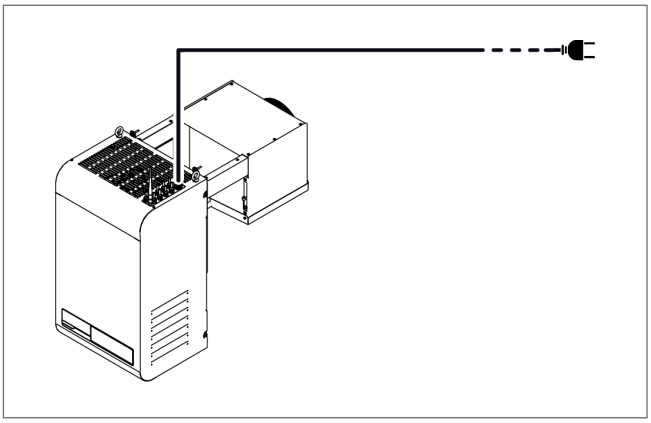

10. Connect electricity and turn on (see "Control panel operations" on page 37).

5.5 Install the BEST W (with plug-in insulating panel)

5.5.1 Result of the installation

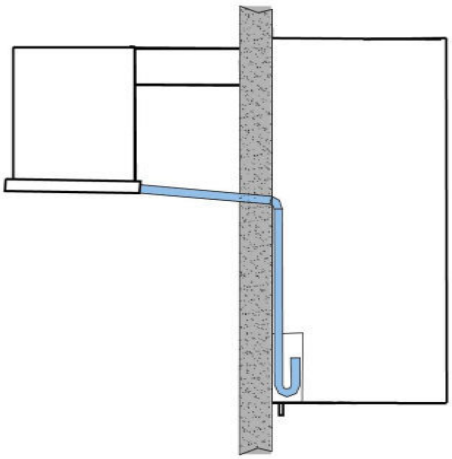

5.5.2 Dimensions of the window to be made in the wall

Depending on the dimensions of the packaged unit, cut a window with the following dimensions in the coldroom wall. Use the packaging template to proceed more quickly.

BEW25 Codes	BEW30 Codes	BEW35 Codes
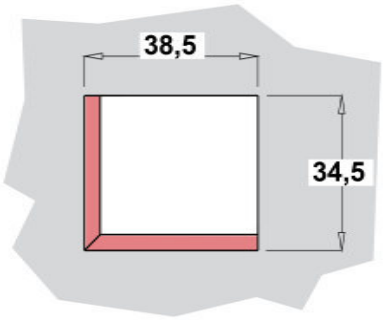	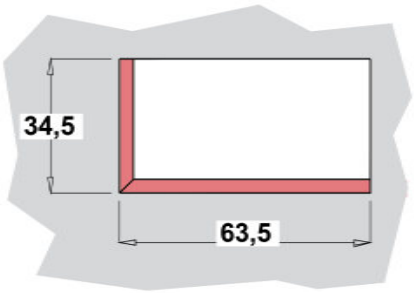	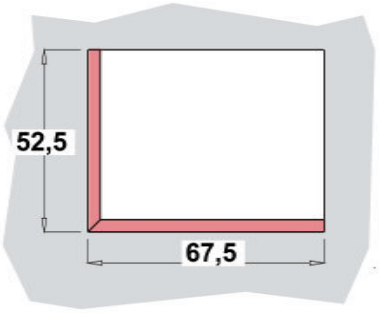

5.5.3 Procedure

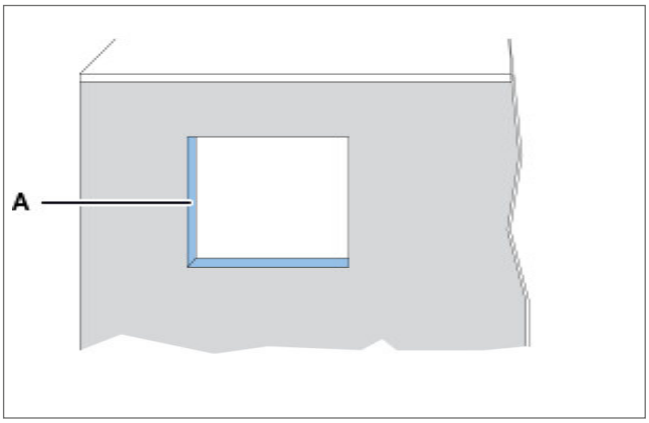

1. On the wall of the refrigeration coldroom, make a window **[A]** using the template in the packaging.

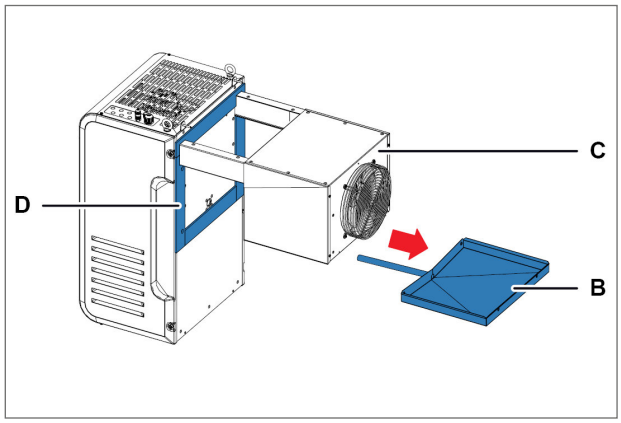

2. Unscrew the tray screws **[B]** and remove it from the evaporating part **[C]**, paying attention to the drain heater.
3. Apply the gaskets **[D]** supplied with the plug-in insulating panel kit.

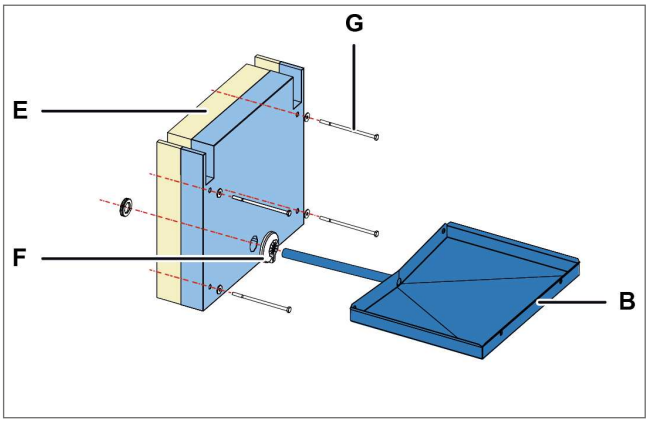

4. Place the plug-in insulating panel **[E]** between the brackets of the packaged unit.
5. Insert the tube of the tray **[B]** with the gasket **[F]** together with the screws **[G]** into the plug-in insulating panel.

***NOTICE**: pay attention to the correct positioning of the drain heater.*

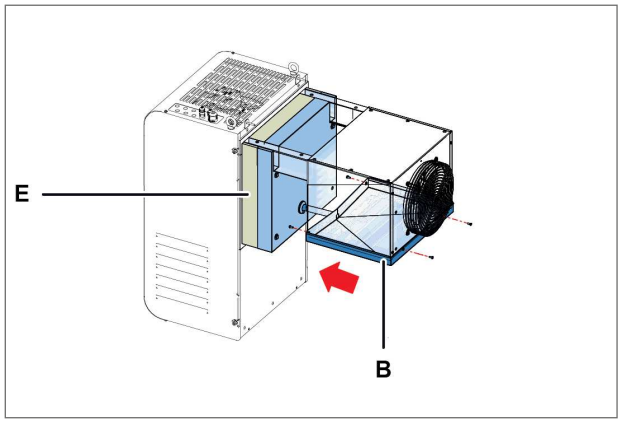

6. Secure the plug-in insulating panel **[E]** and the tray **[B]** to the packaged unit.

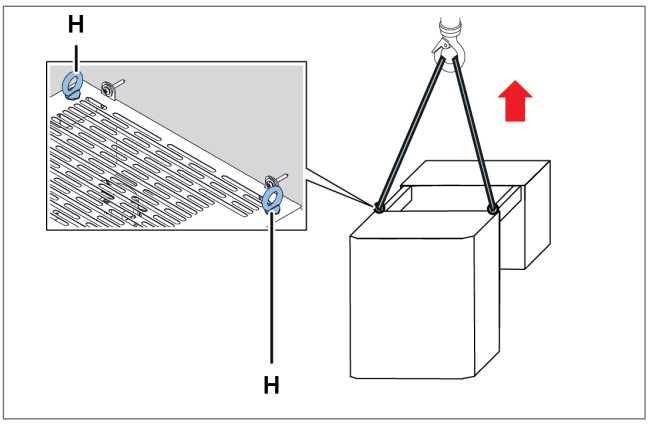

7. Lift the packaged unit using the eyebolts **[H]**.

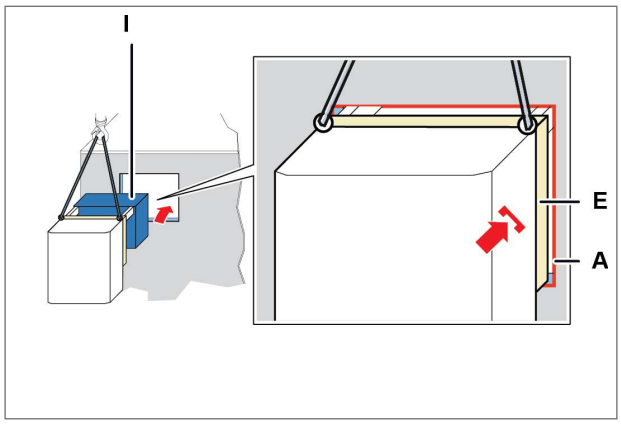

8. Insert the evaporating part **[I]** and recess the plug-in insulating panel **[E]** in the window **[A]** of the wall.

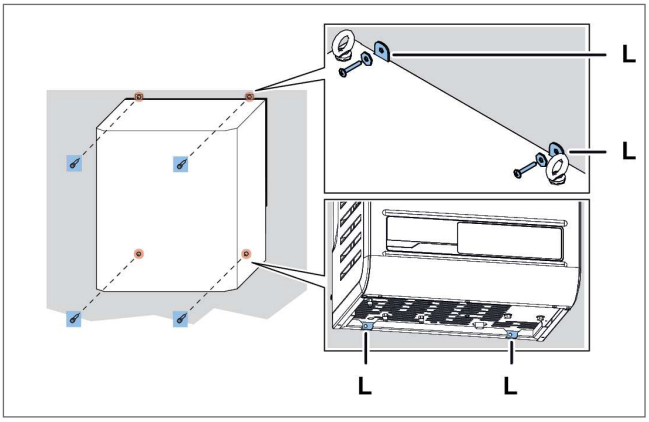

9. Secure the packaged unit to the wall by inserting the screws in the holes **[L]**.

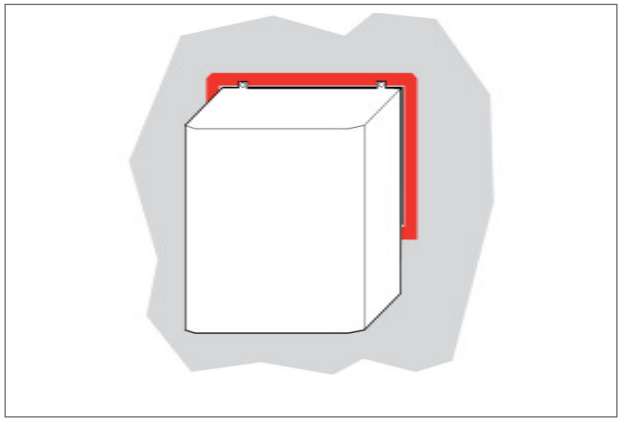

10. Seal the parts of the packaged unit in contact with the edges of the window with silicone.

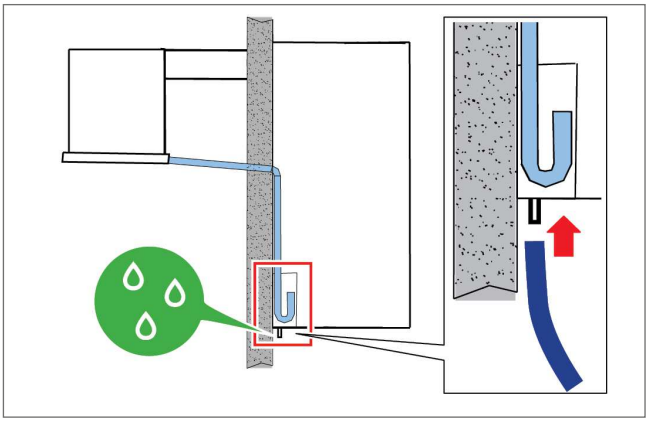

11. Connect the overflow tube to drain the condensate.
12. Install the door switch (see "Secure the door switch" on page 33).

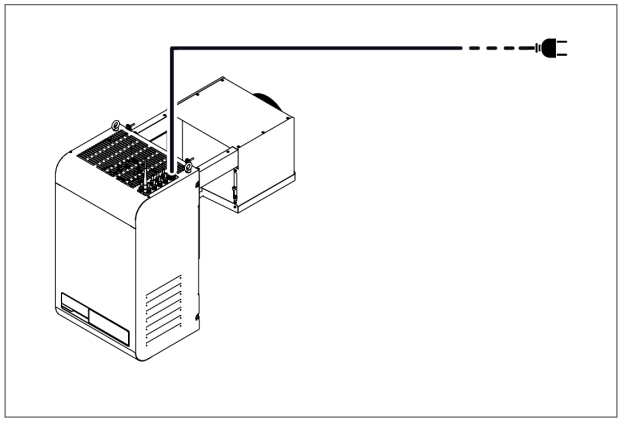

13. Connect electricity and turn on (see "Control panel operations" on page 37).

5.6 Install the BEST WT (with the pre-fitted plug-in insulating panel)

5.6.1 Result

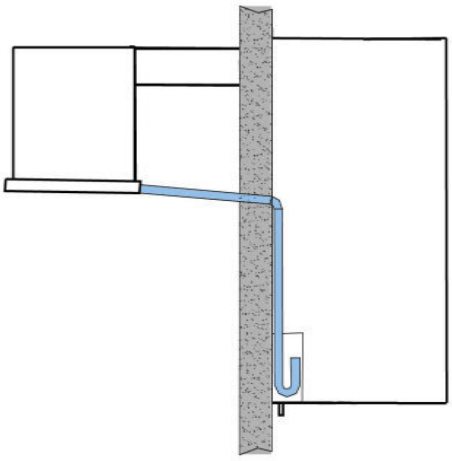

5.6.2 Dimensions of the window to be made in the wall

For this type of installation, depending on the dimensions of the packaged unit, a window with the following dimensions in centimeters (cm) must be made in the coldroom wall chosen for installation:

BEWT25 Codes	BEWT30 Codes	BEWT35 Codes
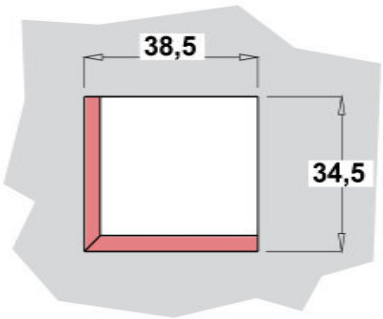	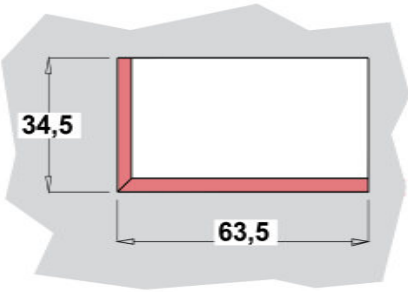	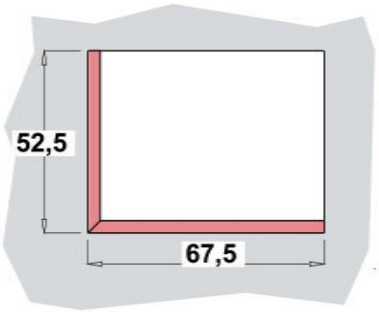

5.6.3 Procedure

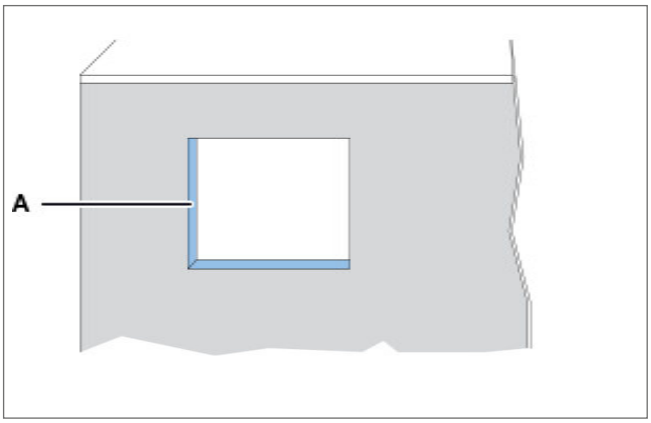

1. On the wall of the refrigeration coldroom, make a window **[A]** using the template in the packaging.

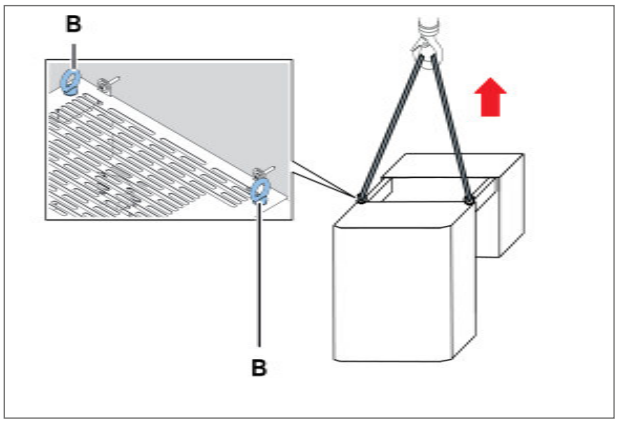

2. Lift the packaged unit using the eyebolts **[B]**.

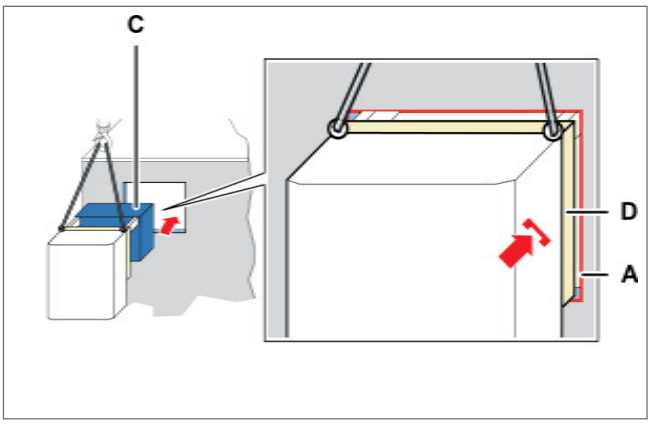

3. Insert the evaporating part **[C]** and recess the plug-in insulating panel **[D]** in the window **[A]** of the wall.

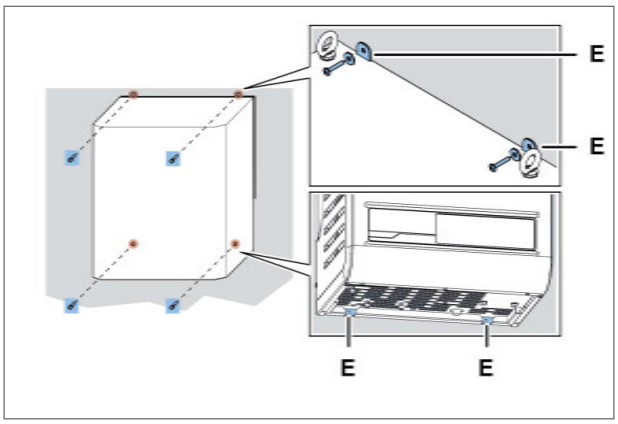

4. Secure the packaged unit with the screws **[E]**.

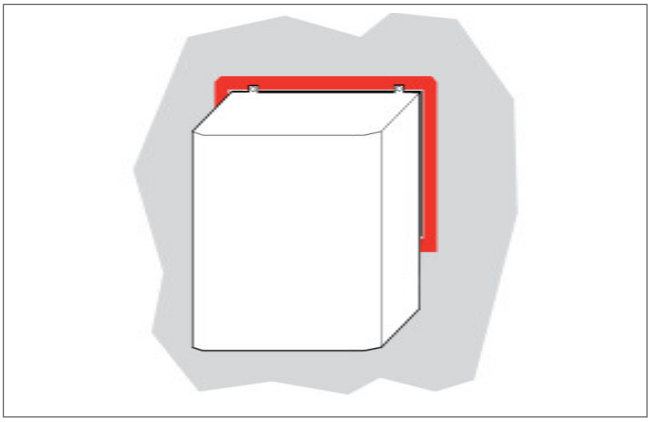

5. Seal the parts of the packaged unit in contact with the window with silicone.

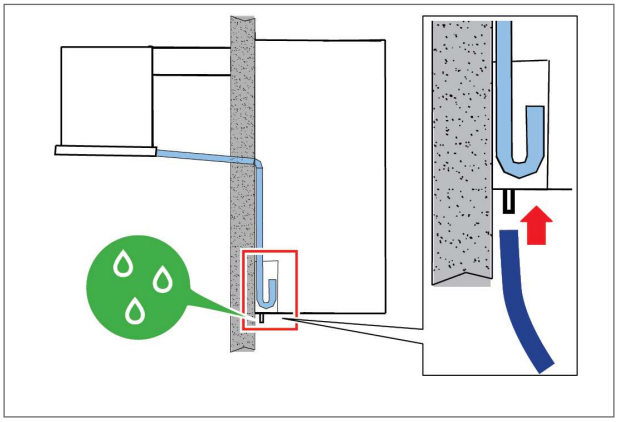

6. Connect the overflow tube to drain the condensate.
7. Install the door switch (see "Secure the door switch" below).

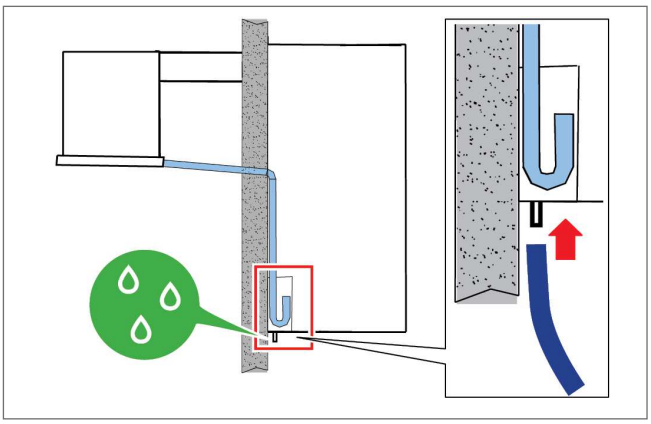

8. Connect electricity and turn on (see "Control panel operations" on page 37).

5.7 Secure the door switch

5.7.1 Safety

CAUTION!: to avoid signal interference, the door switch cable must pass far away from the electric current cables.

CAUTION!: the installation of electrical components inside the refrigeration coldroom falls entirely under the responsibility of the end user. Only use suitable materials for the types of risks, in compliance with the laws in force.

5.7.2 Procedure

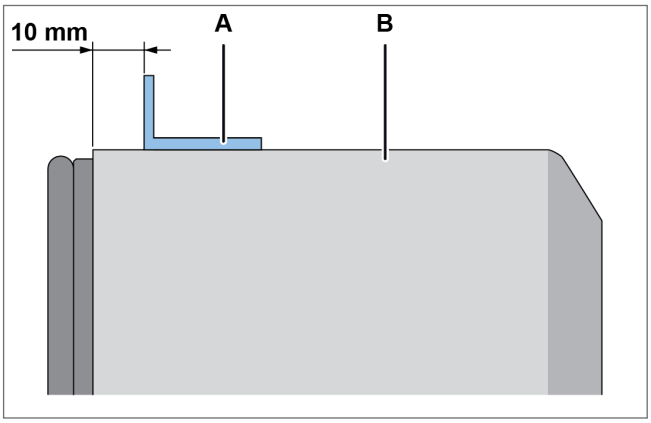

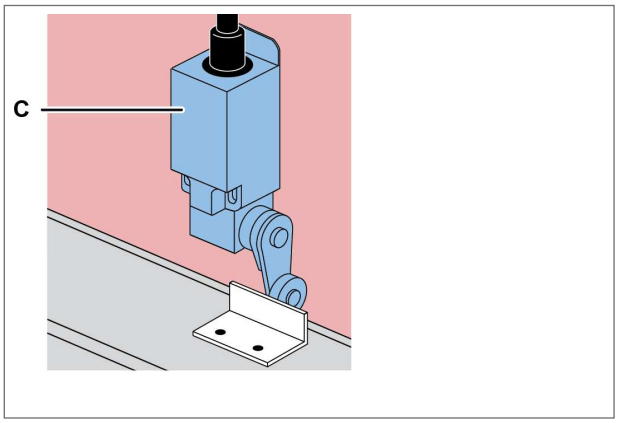

1. Secure the retainer **[A]** on the door of the refrigeration coldroom **[B]**, positioning it about 10 mm from the leaf and checking the correct positioning during the installation stage.
2. Secure the door switch **[C]**.

   ***Note**: according to the type of refrigeration coldroom, choose the best installation position and method.*

5.8 Connect the packaged unit to the electrical mains

5.8.1 Safety

DANGER! Electrocution. Always use adequate equipment and accessories and follow the connection warnings given in this instruction manual.

5.8.2 Connect the packaged unit

1. See "Requirements for the connection to the electrical mains" on page 27.
2. Once connected, the display lights up.

5.8.3 Connect the coldroom light

Wire the coldroom light by connecting it with the preset cable for connection to the packaged unit.

5.9 Work area and operational tasks

5.9.1 Required skills

	Operator

5.9.2 Work area

The work area for the operator is that in front of the control panel.

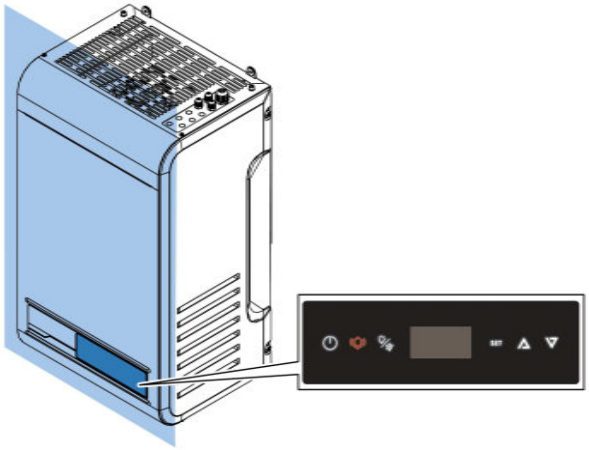

5.9.3 Operating tasks

The operator sets the packaged unit and checks that is functions correctly.

The operator periodically cleans the packaged unit (see "Maintenance and cleaning performed by the operators" on page 89).

6. Start-up

This section includes the following topics:

6.1 Control panel 36
6.2 Control panel operations 37
6.3 Setting the date and time 38
6.4 Using the MY I.D. App 41
6.5 The passwords 45

6.1 Control panel

6.1.1 Control elements supplied with the packaged unit

It is possible to control the packaged unit via the control panel or via mobile devices connected to the packaged unit via Bluetooth.

6.1.2 Description of the buttons on the control panel

Panel on the machine	Remote panel

Button	Function	Steady on	Flashing on
	Press briefly: returns to the previous menu level. Long press (3 seconds): turns the packaged unit on and off.	Menu navigation in progress.	Switch-on or off in progress
	Press briefly: displays the list of activity alarms. Long press (3 seconds): resets the manually reset alarms.	Alarm canceled and entered in the alarm log.	Packaged unit in alarm state
	Press briefly (3 seconds): turns the light on and off. Long press (6 seconds): manually controls defrost.	-	-
SET	Press briefly: confirms the displayed value. Long press (3 seconds): accesses the setpoint menu. Pressing SET and △ simultaneously (3 seconds): accesses the parameters menu.	Setpoint or active parameters menu	-

Button	Function	Steady on	Flashing on
△	Press briefly: scrolls through the menu items or increases the displayed value. Pressing SET and △ simultaneously (3 seconds): accesses the parameters menu.	-	Setpoint or active parameters menu
▽	Press briefly: scrolls through the menu items or decreases the displayed value. Long press (3 seconds): accesses the Quick Menu.	-	Setpoint or active parameters menu

6.1.3 Description of the display

Pilot light	Steady on	Flashing on
	Heating output active	-
	One or more clock functions active: • Defrost with hourly programming • Energy saving with hourly programming	-
	Defrost active	Dripping stage active; defrost request pending
	One or more ECO functions active: • Smart Defrost active • Floating condensation active • Energy Saving active	-
	One or more auxiliary outputs active: • Discharge heater function active • Humidity regulation active • General functions active	-
	Light on	Door closed and delayed light switch-off
	Evaporator-fan active	-
	One or more compressors active	Compressor not enabled at start-up due to: • Safety device times • Open door • Start-up delay

6.2 Control panel operations

***IMPORTANT**: these operations are also possible from the App and do not correspond to the parameters.*

6.2.1 Turn the packaged unit on and off

- Turn on: press and hold the ⏻ button for 3 seconds. The value of the quantity set in parameter **/t1** appears on the display. Refer to the complete manual on the MY I.D. App.
- Turn off: and press and hold the ⏻ button for 3 seconds. **OFF** and the value of the variable set in parameter **/t1** alternate on the display. Refer to the complete manual on the MY I.D. App.

***Note**: the ambient temperature must be below 32°C to be able to carry out the first start-up.*

6.2.2 Switch the coldroom light on and off

- Switch on: press and hold the button for 3 seconds and release. The coldroom pilot light lights up on the display.
- Switch off: press and hold the button for 3 seconds and release. The coldroom pilot light on the display goes off.

6.2.3 Set the temperature setpoint value

- Press and hold the SET button for 3 seconds and release. **SEt** and the temperature setpoint value alternate on the display.
- Briefly press the SET button to be able to modify the temperature setpoint value. The display shows the current temperature setpoint value.
- Press the ∆ and ∇ buttons to select the desired temperature setpoint value.
- Briefly press the SET button to save the new temperature setpoint value. The value of the quantity set in parameter **/t1** appears on the display.Refer to the complete manual on the MY I.D. App.

6.2.4 Controlling the manual defrost cycle

- Press and hold the button for 6 seconds. The defrost pilot light lights up on the display. If the defrost is with hot gas, the compressor pilot light also lights up.

6.2.5 View and reset the active alarms

Flashing text indicates the presence of triggered alarms.

- Press the button briefly. The display shows the code of the last triggered alarm.
- Press the ∆ and ∇ buttons to view the codes of the triggered alarms.
- Press and hold the button for 3 seconds and release to reset the triggered alarms that require a manual reset. **no aLr** appears on the display.

Exiting from a menu

- Briefly press the button at least once to return to the desired position.

6.3 Setting the date and time

6.3.1 Enter the password

Step	Button	Action	Result
1	SET ∆	Press and hold simultaneously for 3 seconds and release.	PSS "PSS" appears on the display.
2	SET	Press briefly.	P 0 "P 0" appears on the display.
3	∆|∇	Press briefly to display the relevant number (e.g. select "P 2" to enter number 2). See "The passwords" on page 45.	P 2
4	SET	Press briefly.	P 0 The value is stored."P 0" appears on the display. Repeat the previous step until the password is entered.
5	SET	Press briefly.	CnF The first item of the parameters menu appears on the display.

6.3.2 Menu structure with Installer access

1st level		2nd level	
Menu	**Description**	**Menu**	**Description**
CNF	Configuration		
SER	Service	**INS**	Installer
		CLO	Cloning
REG	Regulation	**CLD**	Cooling
		NZ	Neutral Zone
		HUM	Humidity
CMP	Compressor	**PRE**	Pressure
		TME	Times
		AOM	Compressor analog output
CND	Condenser	**REG**	Regulation
		AOC	Condenser analog output
DEF	Defrost	**DFR**	Defrost
FAN	Evaporator Fans		
EEV	Electronic Valve	**REG**	Regulation
		PRO	Protections
DOL	Coldroom Door and Light		
ALM	Alarms	**IN**	Alarms from inputs
		OP	Alarms from operations
		HCP	HACCP Alarms
		ALS	Alarm setting
GEF	General functions	**ALF**	General alarms
STG	Settings	**RTC**	Clock
		BMS	Supervision
		NET	Master/Slave
		PWD	Password
		INI	Initialization
		UOM	Unit of measurement
OUT	Logout		

6.3.3 Menu structure with user access

1st level		2nd level	
Menu	**Description**	**Menu**	**Description**
REG	Regulation	**CLD**	Cooling
		NZ	Neutral Zone
		HUM	Humidity
CND	Condenser	**REG**	Regulation
ALM	Alarms	**HCP**	HACCP Alarms
STG	Settings	**RTC**	Clock
		PWD	Password
		UOM	Unit of measurement
OUT	Logout		

6.3.4 Modify parameter diF (cooling differential)

The procedure to change the operating parameters is the same for all sections of the menu. Below is an example:

Step	Button	Action	Result
1	-	Enter the password.	Access enabled.
2	SET △	Press and hold simultaneously for 3 seconds and release.	CnF "CnF" appears on the display.
3	△|▽	Press to view the **rEG** item.	rEG
4	SET	Press briefly.	Cld "Cld" appears on the display.
5	SET	Press briefly.	SEt "SEt" appears on the display.
6	△|▽	Press the arrows to view the parameter.	dIF
7	SET	Press briefly.	1.3 The parameter value appears on the display.
8	△|▽	Press to set the desired value.	2.0
9	SET	Press briefly.	dIF The value is stored. The parameter name appears on the display.

6.3.5 Changing the date and time

StG > rtC

Step	Button	Action	Result
1	SET	From the **RTC**parameter display, press **SET**.	rtC
2	▽	**TZ** appears alternating with a digit indicating the time zone currently set. Press **DOWN**to skip.	tZ -1
	SET	Press **SET** to change the time zone. ***Note***: *See "Time zones table" on page 119.*	

Step	Button	Action	Result
3	∆|∇	The value of the current time zone set appears fixed. Press **UP/DOWN** to select the desired value.	-1.00
	SET	Press **SET** to confirm and switch to the next value.	
4	∆|∇	The letter **d** (day) appears, followed by two digits indicating the number of the day. Press **UP/DOWN** to set the day.	d10
	SET	Press **SET** to confirm and switch to the next value.	
5	∆|∇	The letter **m** (month) appears, followed by two digits indicating the number of the month. Press **UP/DOWN** to set the month.	n09
	SET	Press **SET** to confirm and switch to the next value.	
6	∆|∇	The letter **y** (year) appears, followed by two digits indicating the number of the year. Press **UP/DOWN** to set the year.	y19
	SET	Press **SET** to confirm and switch to the next value.	
7	∆|∇	The letter **h** (hour) appears, followed by two digits indicating the time. Press **UP/DOWN** to set the time.	h13
	SET	Press **SET** to confirm and switch to the next value.	
8	∆|∇	The letter **m** (minute) appears, followed by two digits indicating the minutes. Press **UP/DOWN** to set the minutes.	n54
	SET	Press **SET** to confirm and conclude the settings.	rtC "**rtC**" appears on the display.

6.3.6 Exit the menu

Step	Button	Action	Result
1	⏻	Press briefly as many times as needed.	-135 The value of the quantity set in parameter **/t1** appears on the display. See configuration parameters.

6.4 Using the MY I.D. App

6.4.1 Using the App for the first time

After switching the packaged unit on, proceed as follows:

1. Download the free MY I.D. App from the Apple App Store or the Google Play Store.
2. Create your Rivacold account.
3. Pair the App with the packaged unit, see "Register the packaged unit using the QR code" below or "Register the packaged unit using the numeric code" on the facing page

6.4.2 Position the QR code

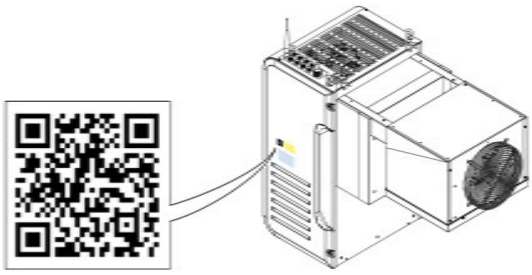

6.4.3 Register the packaged unit using the QR code

1. Select the ≡ menu.

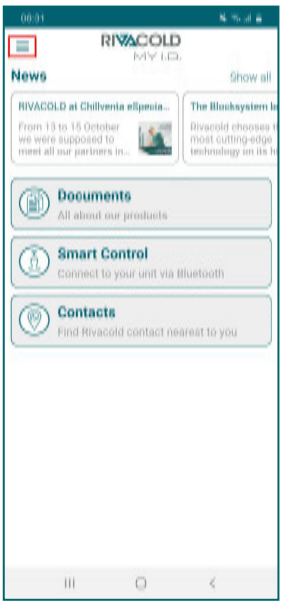

2. Select **Units**.

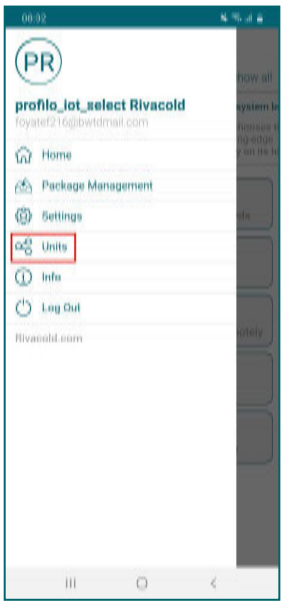

3. Select **+**.

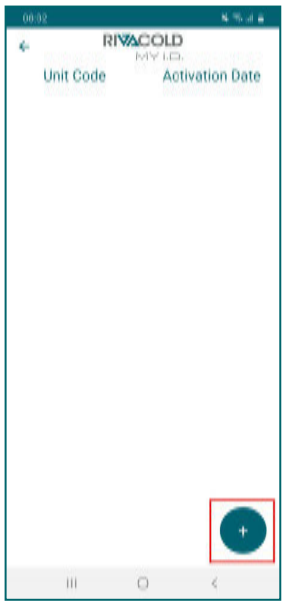

4. Select **Scan QR**.
5. Scan the QR code next to the identification plate.
6. Choose the option to share the position. From here on, the packaged unit appears in the list of controlled devices.

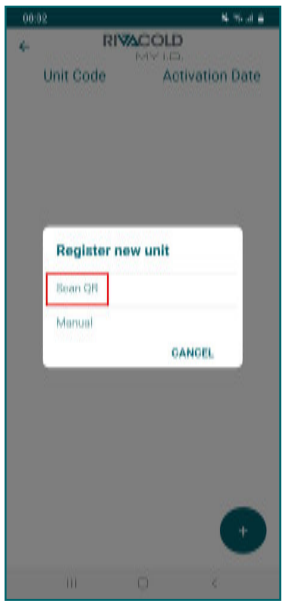

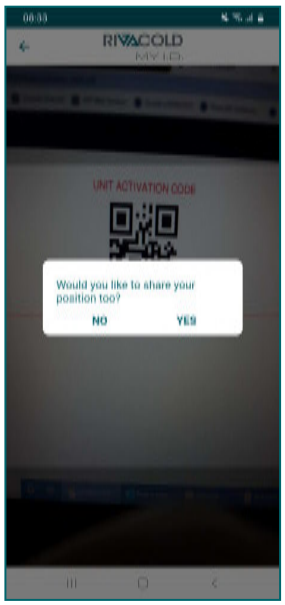

6.4.4 Register the packaged unit using the numeric code

1. Select the menu ≡

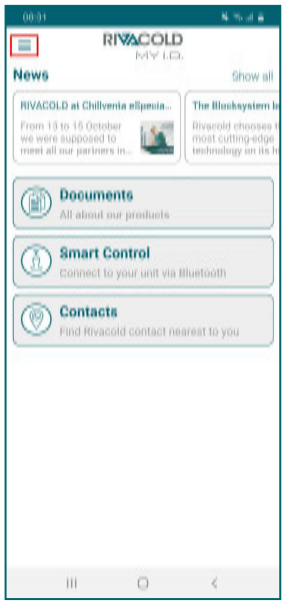

2. Select **Units**.

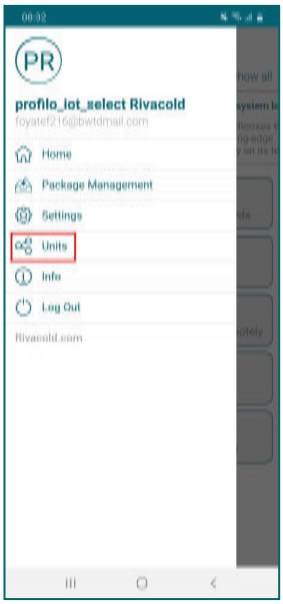

3. Select **+**

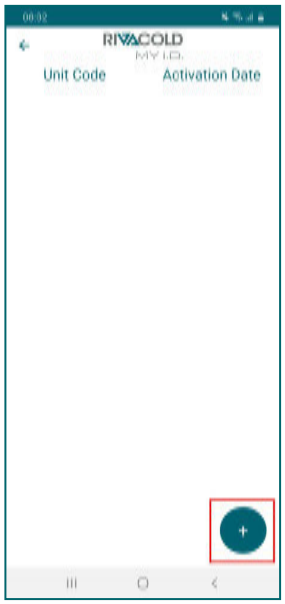

4. Select **Manual**.

5. Enter the packaged unit code next to the identification plate and select **OK**.

6. Choose the option to share the position. From here on, the packaged unit appears in the list of controlled devices.

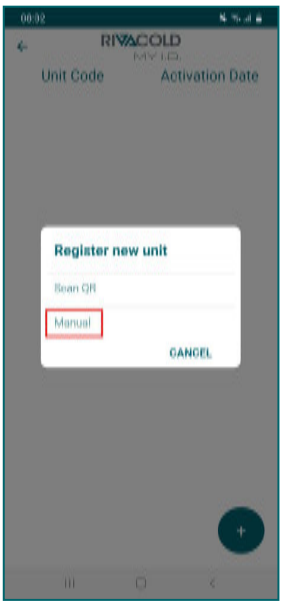

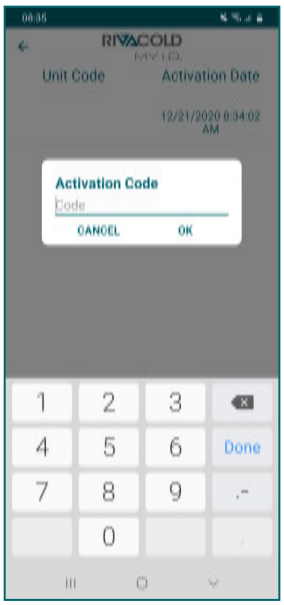

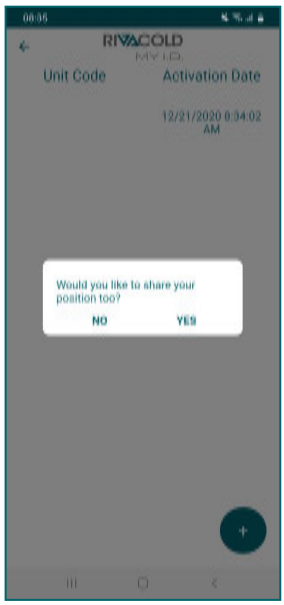

6.4.5 Access the packaged unit via Bluetooth

1. Select **Smart Control**.

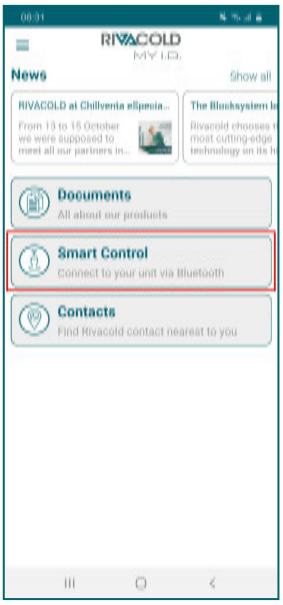

2. Select the packaged unit to be controlled.

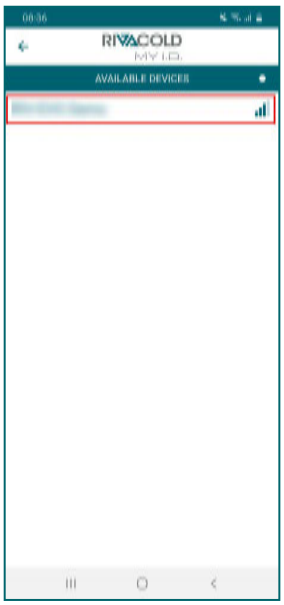

3. Select the profile you want to log in with.

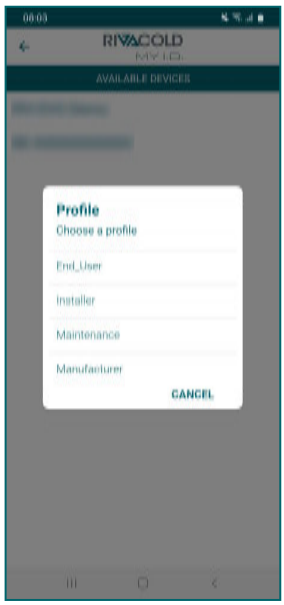

4. Enter the control panel login password, see "The passwords" on the facing page.

5. Select the desired action.

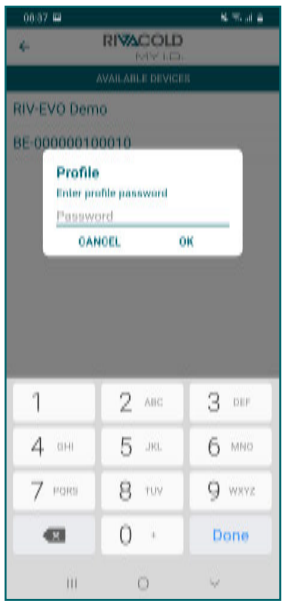

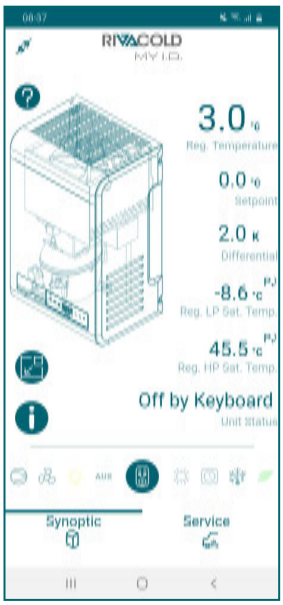

6.5 The passwords

6.5.1 Levels of access to the parameters

Access to the parameters menu and control of the packaged unit from the App are password protected.

There are two levels of access: one for the installer and one for the end user.

After a few minutes of inactivity, the authorization to modify the parameters expires and the controller returns to the initial screen.

6.5.2 Default password

Below are the preset passwords to access the parameters and the packaged unit via the App.The installer can change both passwords, whereas the end user can only change their own. Refer to the complete manual on the MY I.D. App.

Profile	MY I.D. Profile	Password
End user	End_User	2201
Installer	Installer	2300

6. Use

This section includes the following topics:

6.6 Setting the date and time 46

6.6 Setting the date and time

6.6.1 Enter the password

Step	Button	Action	Result
1	SET △	Press and hold simultaneously for 3 seconds and release.	PSS "PSS" appears on the display.
2	SET	Press briefly.	P 0 "P 0" appears on the display.
3	△|▽	Press briefly to display the relevant number (e.g. select "P 2" to enter number 2). See "The passwords" on the previous page.	P 2
4	SET	Press briefly.	P 0 The value is stored."P 0" appears on the display. Repeat the previous step until the password is entered.
5	SET	Press briefly.	CnF The first item of the parameters menu appears on the display.

6.6.2 Menu structure with Installer access

1st level		2nd level	
Menu	Description	Menu	Description
CNF	Configuration		
SER	Service	INS	Installer
		CLO	Cloning
REG	Regulation	CLD	Cooling
		NZ	Neutral Zone
		HUM	Humidity
CMP	Compressor	PRE	Pressure
		TME	Times
		AOM	Compressor analog output
CND	Condenser	REG	Regulation
		AOC	Condenser analog output
DEF	Defrost	DFR	Defrost

1st level		2nd level	
Menu	**Description**	**Menu**	**Description**
FAN	Evaporator Fans		
EEV	Electronic Valve	**REG**	Regulation
		PRO	Protections
DOL	Coldroom Door and Light		
ALM	Alarms	**IN**	Alarms from inputs
		OP	Alarms from operations
		HCP	HACCP Alarms
		ALS	Alarm setting
GEF	General functions	**ALF**	General alarms
STG	Settings	**RTC**	Clock
		BMS	Supervision
		NET	Master/Slave
		PWD	Password
		INI	Initialization
		UOM	Unit of measurement
OUT	Logout		

6.6.3 Menu structure with user access

1st level		2nd level	
Menu	**Description**	**Menu**	**Description**
REG	Regulation	**CLD**	Cooling
		NZ	Neutral Zone
		HUM	Humidity
CND	Condenser	**REG**	Regulation
ALM	Alarms	**HCP**	HACCP Alarms
STG	Settings	**RTC**	Clock
		PWD	Password
		UOM	Unit of measurement
OUT	Logout		

6.6.4 Modify parameter diF (cooling differential)

The procedure to change the operating parameters is the same for all sections of the menu. Below is an example:

Step	Button	Action	Result
1	-	Enter the password.	Access enabled.
2	SET △	Press and hold simultaneously for 3 seconds and release.	CnF "CnF" appears on the display.
3	△|▽	Press to view the **rEG** item.	rEG

Step	Button	Action	Result
4	SET	Press briefly.	"Cld" appears on the display.
5	SET	Press briefly.	"SEt" appears on the display.
6	∆|∇	Press the arrows to view the parameter.	
7	SET	Press briefly.	The parameter value appears on the display.
8	∆|∇	Press to set the desired value.	
9	SET	Press briefly.	The value is stored. The parameter name appears on the display.

6.6.5 Changing the date and time

StG > rtC

Step	Button	Action	Result
1	SET	From the **RTC**parameter display, press **SET**.	
2	∇	**TZ** appears alternating with a digit indicating the time zone currently set. Press **DOWN**to skip.	
	SET	Press **SET** to change the time zone. ***Note***: *See "Time zones table" on page 119.*	
3	∆|∇	The value of the current time zone set appears fixed. Press **UP/DOWN** to select the desired value.	
	SET	Press **SET** to confirm and switch to the next value.	
4	∆|∇	The letter **d** (day) appears, followed by two digits indicating the number of the day. Press **UP/DOWN** to set the day.	
	SET	Press **SET** to confirm and switch to the next value.	

Step	Button	Action	Result
5	∆|∇	The letter **m** (month) appears, followed by two digits indicating the number of the month. Press **UP/DOWN** to set the month.	
	SET	Press **SET** to confirm and switch to the next value.	
6	∆|∇	The letter **y** (year) appears, followed by two digits indicating the number of the year. Press **UP/DOWN** to set the year.	
	SET	Press **SET** to confirm and switch to the next value.	
7	∆|∇	The letter **h** (hour) appears, followed by two digits indicating the time. Press **UP/DOWN** to set the time.	
	SET	Press **SET** to confirm and switch to the next value.	
8	∆|∇	The letter **m** (minute) appears, followed by two digits indicating the minutes. Press **UP/DOWN** to set the minutes.	
	SET	Press **SET** to confirm and conclude the settings.	 "**rtC**" appears on the display.

6.6.6 Exit the menu

Step	Button	Action	Result
1	⏻	Press briefly as many times as needed.	 The value of the quantity set in parameter **/t1** appears on the display. See configuration parameters.

7. Quick menu

This section includes the following topics:

7.1 Description of the Quick menu 50
7.2 View the input and output state 50
7.3 Download and upload 53
7.4 Alarm log 54
7.5 HACCP alarm log 55
7.6 System information 57
7.7 Lock and unlock the control panel 57

7.1 Description of the Quick menu

7.1.1 Functions

The Quick menu allows direct access to some controller functions:

Function code	Description
IOS	It allows you to view the state of the packaged unit inputs and outputs.
d/U	It allows you to download and upload parameter configurations.
HAL	It allows you to view and save the alarm log.
HCP	It allows you to view and save the HACCP alarm log.
InF	It allows you to view the information about the controller.
LOC	It allows you to lock and unlock the control panel keyboard.

7.1.2 Accessing the quick menu

Step	Button	Action	Result
1	∇	Press and hold for 3 seconds and release.	The first item of the Quick menu appears on the display.
2	△|∇	Press briefly to display the desired menu item.	
3	SET	Press briefly.	The first item of the selected submenu appears on the display.

7.2 View the input and output state

Quick menu > IOS

7.2.1 Available functions

Function code	Description
AI	View the values of the analog inputs.
dI	View the values of the digital inputs.

Function code	Description
AO	View the values of the analog outputs.
dO	View the values of the digital outputs.

7.2.2 View the state of input T21 (evaporator temperature probe)

IOS > AI

Step	Button	Action	Result
1	∇	Press and hold for 3 seconds and release.	The first item of the quick menu appears on the display.
2	SET	Press briefly.	"AI" appears on the display.
3	SET	Press briefly.	The first item of the “AI” section appears on the display.
4	△|∇	Press briefly to view the relevant analog input.	
5	SET	Press briefly.	The value detected by the evaporator temperature probe appears on the display.

7.2.3 Input and output table

Unit descriptions	Unit	I/O	I/O Description
Analog inputs	AI	T11	Coldroom temperature probe
		T21	Evaporator temperature probe
		T12	Coldroom 2 temperature probe
		T22	Evaporator 2 temperature probe
		LP1	Circuit 1 low pressure probe
		HP1	Circuit 1 high pressure probe
		LP2	Circuit 2 low pressure probe
		HP2	Circuit 2 high pressure probe
		LP3	Circuit 3 low pressure probe
		HP3	Circuit 3 high pressure probe
		STA	Ambient temperature probe
		STL	Suction temperature probe
		STH	Discharge temperature probe
		LIQ	Liquid temperature probe
		STE	Evaporation temperature probe
		BPE	Evaporator pressure probe
		HCP	HACCP temperature probe
		HUM	Humidity probe
		SG1	General probe 1
		SG2	General probe 2
Digital inputs	DI	PSH	High pressure switch
		PSL	Low pressure switch
		PDL	Pump-down pressure switch
		SR1	Door switch
		CO1	Compressor 1 alarm
		CO2	Compressor 2 alarm
		CO3	Compressor 3 alarm
		ONF	On/Off from digital input
		EGS	Energy Saving from digital input
		EAL	External serious alarm
		GN1	General input 1
		GN2	General input 2
Analog outputs	AO	VC	Condenser fans
		M1	compressor
		VE1	Evaporator fans
		VE2	Evaporator 2 Fans
		HEA	Heating
		YVW	Water solenoid valve
		GEN	General analog output

Unit descriptions	Unit	I/O	I/O Description
Digital outputs	DO	M1	Compressor 1
		M2	Compressor 2
		M3	Compressor 3
		VC	Condenser fans
		DF1	Evaporator defrost
		DF2	Evaporator 2 defrost
		VE1	Evaporator fans
		VE2	Evaporator 2 Fans
		ONF	On/Off from digital output
		ALR	Alarm
		RS1	Evaporator discharge heater
		RS2	Evaporator 2 discharge heater
		YV1	PWM solenoid
		YVL	Liquid solenoid
		YVW	Water solenoid
		HEA	Heating
		HUM	Humidifier
		DEU	Dehumidifier
		VTP	Button thermostatic valve
		HL1	Coldroom light
		GN1	General output 1
		GN2	General output 2
Electronic valve	EEV	STP	Valve opening step
		OP/	Valve opening percentage [MD1]

7.3 Download and upload

7.3.1 Available functions

***Note**: the packaged unit must be **OFF**.*

Quick menu > d/L

Function code	Description
dnL	Download the parameter configuration currently in use
UPL	Upload a configuration
dLL	Download the logs generated during operation
SOF	Update the controller software

7.3.2 Download the parameter configuration in use

***Note**: you must be logged in as an installer to start downloading the parameter configuration, see The passwords.*
***Note**: the following procedure is applicable for the UPL, dLL and SOF functions, too.*

d/L > dnL

Step	Button	Action	Result
1	▽	Press and hold for 3 seconds and release.	The first item of the Quick menu appears on the display.
2	△|▽	Press briefly to display the desired menu item.	
3	SET	Press briefly.	
4	SET	Press briefly.	"no" appears on the display.
5	△|▽	Press briefly.	
6	SET	Press briefly.	If the save function has been completed correctly, "dOn" will appear on the display. If the save function was not successful, "Err" will appear on the display. Repeat the step.

***Note (*)**: the configuration of the parameters is saved in a file in txt format whose name is Export_n, where n is the progressive number of the completed save functions.*

7.4 Alarm log

7.4.1 Available functions

Quick menu > HAL

Function code	Description
ALL	View the alarm log
dLA	Download the alarm log

7.4.2 View the alarm log

HAL > ALL

Step	Button	Action	Result
1	▽	Press and hold for 3 seconds and release.	The first item of the Quick menu appears on the display.

Step	Button	Action	Result
2	∆|∇	Press briefly to display the desired menu item.	HAL
3	SET	Press briefly.	ALL "ALL" appears on the display.
4	SET	Press briefly.	038 The display shows the code of the last logged alarm.
5	∆|∇	Press briefly to view the alarm codes in the log.	035

7.5 HACCP alarm log

Quick menu > HCP

7.5.1 Available functions

Function code	Description
HC1	View the HACCP high temperature alarm log.
HC2	View the HACCP faulty probe alarm log.
HC3	View the HACCP blackout alarm log.
DHL	Download the HACCP alarm log

7.5.2 View the HACCP high temperature alarm log

Quick menu > HCP > ALL

Step	Button	Action	Result
1	∇	Press and hold for 3 seconds and release.	105 The first item of the Quick menu appears on the display.
2	∆|∇	Press briefly to display the desired menu item.	HCP
3	SET	Press briefly.	HC 1 "HC1" appears on the display.
4	SET	Press briefly.	28.1 The temperature logged in the last HACCP alarm appears on the display.
5	∆|∇	Press briefly to view the temperatures logged in the HACCP alarm log.	21.0

7.5.3 Download the HACCP alarm log

Quick menu > HCP > ALL

Step	Button	Action	Result
1	▽	Press and hold for 3 seconds and release.	The first item of the Quick menu appears on the display.
2	△|▽	Press briefly to display the desired menu item.	
3	SET	Press briefly.	"HC1" appears on the display.
4	△|▽	Press briefly to display the desired menu item.	
5	SET	Press briefly.	"Int" appears on the display.
6	△|▽	Press briefly to select the save destination (*): • **Int**: the file is saved in the internal memory. • **USb**: the file is saved to the external memory, which must first be inserted into the micro USB port on the controller board, see "Connecting to the micro USB port" on page 59.	
7	SET	Press briefly.	"no" appears on the display.
8	△|▽	Press briefly.	
9	SET	Press briefly.	If the save function has been completed correctly, "dOn" will appear on the display. If the save function was not successful, "Err" will appear on the display. Repeat the step.

7.6 System information

Quick menu > InF

7.6.1 Available functions

Function code	Description
VEr	View the version of the software installed on the controller.
OS	View the version of the operating system installed on the controller.
BOt	View the start-up version.

7.6.2 View the version of the installed software

InF > VEr

Step	Button	Action	Result
1	▽	Press and hold for 3 seconds and release.	The first item of the Quick menu appears on the display.
2	△|▽	Press briefly to display the desired menu item.	
3	SET	Press briefly.	"VEr" appears on the display.
4	SET	Press briefly.	The version of the software installed on the controller appears on the display.

7.7 Lock and unlock the control panel

7.7.1 Lock the control panel

Quick menu > LOC

Step	Button	Action	Result
1	▽	Press and hold for 3 seconds and release.	The first item of the Quick menu appears on the display.
2	△|▽	Press briefly to display the desired menu item.	
3	SET	Press briefly.	"YES" appears on the display.

Step	Button	Action	Result
4	SET	Press briefly.	"LOC" appears on the display for a few seconds.

7.7.2 Unlock the control panel

Step	Button	Action	Result
1	⏻ ∇	Press simultaneously for 3 seconds.	"unL" and the value of the variable set in parameter **/t1** appear on the display for a few seconds, see "Configuration parameters" on page 63

8. Parameters

This section includes the following topics:

8.1 Connecting to the micro USB port 59
8.2 Structure of the parameters menu 60
8.3 Changing a parameter 61
8.4 Configuration parameters 63
8.5 Service parameters 66
8.6 Regulation parameters 66
8.7 Compressor parameters 67
8.8 Condenser parameters 68
8.9 Defrost parameters 69
8.10 Evaporator fan parameters 71
8.11 Electronic valve parameters 72
8.12 Electronic valve protections 73
8.13 Coldroom light and door switch parameters 75
8.14 Parameters of the alarms 76
8.15 General function parameters 81
8.16 General setting parameters 84

8.1 Connecting to the micro USB port

8.1.1 When to connect

Perform this procedure when you want to save the configuration of the packaged unit parameters on the external memory.

8.1.2 Procedure

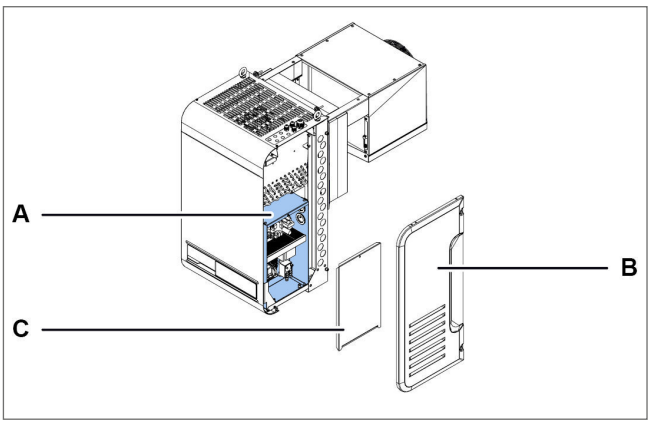

1. Access the electrical box **[A]** by removing the right side panel **[B]** and the electrical box panel **[C]**.

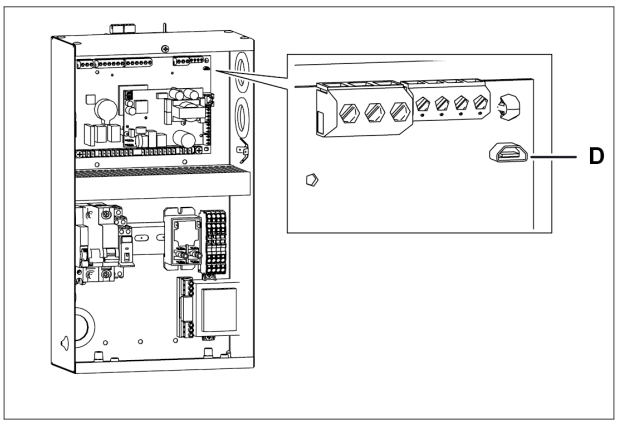

2. Connecting to the micro USB port.

8.2 Structure of the parameters menu

8.2.1 Menu structure with Installer access

1st level		2nd level	
Menu	**Description**	**Menu**	**Description**
CNF	Configuration		
SER	Service	**INS**	Installer
		CLO	Cloning
REG	Regulation	**CLD**	Cooling
		NZ	Neutral Zone
		HUM	Humidity
CMP	Compressor	**PRE**	Pressure
		TME	Times
		AOM	Compressor analog output
CND	Condenser	**REG**	Regulation
		AOC	Condenser analog output
DEF	Defrost	**DFR**	Defrost
FAN	Evaporator Fans		
EEV	Electronic Valve	**REG**	Regulation
		PRO	Protections
DOL	Coldroom Door and Light		
ALM	Alarms	**IN**	Alarms from inputs
		OP	Alarms from operations
		HCP	HACCP Alarms
		ALS	Alarm setting
GEF	General functions	**ALF**	General alarms
STG	Settings	**RTC**	Clock
		BMS	Supervision
		NET	Master/Slave
		PWD	Password
		INI	Initialization
		UOM	Unit of measurement
OUT	Logout		

8.2.2 Menu structure with user access

1st level		2nd level	
Menu	**Description**	**Menu**	**Description**
REG	Regulation	**CLD**	Cooling
		NZ	Neutral Zone
		HUM	Humidity
CND	Condenser	**REG**	Regulation
ALM	Alarms	**HCP**	HACCP Alarms
STG	Settings	**RTC**	Clock
		PWD	Password
		UOM	Unit of measurement
OUT	Logout		

8.3 Changing a parameter

8.3.1 Enter the password

Step	Button	Action	Result
1	SET △	Press and hold simultaneously for 3 seconds and release.	PSS "PSS" appears on the display.
2	SET	Press briefly.	P 0 "P 0" appears on the display.
3	△|▽	Press briefly to display the relevant number (e.g. select "P 2" to enter number 2). See "The passwords" on page 45.	P 2
4	SET	Press briefly.	P 0 The value is stored."P 0" appears on the display. Repeat the previous step until the password is entered.
5	SET	Press briefly.	CnF The first item of the parameters menu appears on the display.

8.3.2 Menu structure with Installer access

1st level		2nd level	
Menu	**Description**	**Menu**	**Description**
CNF	Configuration		
SER	Service	**INS**	Installer
		CLO	Cloning
REG	Regulation	**CLD**	Cooling
		NZ	Neutral Zone
		HUM	Humidity
CMP	Compressor	**PRE**	Pressure
		TME	Times
		AOM	Compressor analog output
CND	Condenser	**REG**	Regulation
		AOC	Condenser analog output
DEF	Defrost	**DFR**	Defrost
FAN	Evaporator Fans		
EEV	Electronic Valve	**REG**	Regulation
		PRO	Protections
DOL	Coldroom Door and Light		
ALM	Alarms	**IN**	Alarms from inputs
		OP	Alarms from operations
		HCP	HACCP Alarms
		ALS	Alarm setting

1st level		2nd level	
Menu	**Description**	**Menu**	**Description**
GEF	General functions	**ALF**	General alarms
STG	Settings	**RTC**	Clock
		BMS	Supervision
		NET	Master/Slave
		PWD	Password
		INI	Initialization
		UOM	Unit of measurement
OUT	Logout		

8.3.3 Menu structure with user access

1st level		2nd level	
Menu	**Description**	**Menu**	**Description**
REG	Regulation	**CLD**	Cooling
		NZ	Neutral Zone
		HUM	Humidity
CND	Condenser	**REG**	Regulation
ALM	Alarms	**HCP**	HACCP Alarms
STG	Settings	**RTC**	Clock
		PWD	Password
		UOM	Unit of measurement
OUT	Logout		

8.3.4 Modify parameter diF (cooling differential)

The procedure to change the operating parameters is the same for all sections of the menu. Below is an example:

Step	Button	Action	Result
1	-	Enter the password.	Access enabled.
2	SET △	Press and hold simultaneously for 3 seconds and release.	"CnF" appears on the display.
3	△|▽	Press to view the **rEG** item.	
4	SET	Press briefly.	"Cld" appears on the display.
5	SET	Press briefly.	"SEt" appears on the display.
6	△|▽	Press the arrows to view the parameter.	

Step	Button	Action	Result
7	SET	Press briefly.	The parameter value appears on the display.
8	∆|∇	Press to set the desired value.	
9	SET	Press briefly.	The value is stored. The parameter name appears on the display.

8.4 Configuration parameters

CNF

8.4.1 List of parameters

Parameter	Description	Options	Unit of measure	Range	Default
Unt	Select the preconfiguration for the unit	1 - BEST WT Medium Temperature with 1 Compressor	-	1...99	0
		2 – BEST WT Low Temperature with 1 Compressor			
		3 – BEST WT Medium Temperature with 2 Compressors			
		4 – BEST WT Low Temperature with 2 Compressors			

Parameter	Description	Options	Unit of measure	Range	Default
UnG	Select the Refrigerant Gas	1 - R22	-	1...40	7
		2 - R134a			
		3 - R404A			
		4 - R407C			
		5 - R410A			
		6 - R507A			
		7 - R290			
		8 - R600			
		9 - R600a			
		10 - R717			
		11 - R744			
		12 - R728			
		13 - R1270			
		14 - R417A			
		15 - R422D			
		16 - R413A			
		17 - R422A			
		18 - R423A			
		19 - R407A			
		20 - R427A			
		21 - R245FA			
		22 - R407F			
		23 - R32			
		24 - HTR01			
		25 - HTR02			
		26 - R23			
		27 - HFO1234yf			
		28 - HFO1234ze			
		29 - R455A			
		30 - R170			
		31 - R442A			
		32 - R447A			
		33 - R448A			
		34 - R449A			
		35 - R450A			
		36 - R452A			
		37 - R508B			
		38 - R452B			
		39 - R513A			
		40 - R454B			
CoN	Management of Condenser regulation	1 - Air - Parallel w/Compressor		1...5	1
		2 - Air - On/Off			
		3 - Air - Variable Speed			
		4 - Water - On/Off			
		5 - Water - Variable Capacity			
PUt	Select Electronic Valve Type	0 - None		0...2	0
		1 - Pulse Valve			
		2 - Stepper Valve			

Parameter	Description	Options	Unit of measure	Range	Default
PUn	Select the stepper valve model	0 - User Defined	-	0...8	1
		1 - Carel E2Vu			
		2 - Danfoss/Saginomya KV			
		3 - Sporlan ESX			
		4 - Alco EXM/EXL			
		5 - Sanhua L Series			
		6 - Hualu DPF 12V			
		7 - Hualu SPF 12V			
		8 - Hualu EPF-VPF 12V			
rt1	Select the variable to show in the display	1 - Coldroom 1 Temperature probe	-	1...9	9
		2 - Evaporator 1 Temperature probe 1			
		3 - Coldroom 2 Temperature probe			
		4 - Evaporator 2 Temperature probe			
		5 - Humidity probe			
		6 - Generic 1 probe			
		7 - Generic 2 probe			
		8 - Cooling setpoint			
		9 - Cooling Regulation Temperature Probe			

8.4.2 Parameter CoM

Air condensation

- **CoM** = 1: parallel with the compressor. The fans start up simultaneously with the activation of at least one of the compressors. The fans are off if defrosting with hot gas.
- **CoM** = 2: ON/OFF. The fans start-up is controlled by the value of the condensing pressure:
  - with the regulation condensing pressure higher than **SCO**, the fans are active.
  - with the regulation condensing pressure less than **SCO** - **dCO**, the fans stop.
- **CoM** = 3: variable speed. The fans start-up is controlled by the value of the condensing pressure and their rotation speed varies according to the condensing regulation:
  - with the regulation condensing pressure higher than (**SCO** - **dCO**) + **AOF**, the fans run at controlled speed.
  - with the regulation condensing pressure the same as **SCO** + **dCO**, the fans run at maximum speed.
  - with the regulation condensing pressure less than **SCO** - **dCO**, the fans stop.

__Note__: for the description of parameters __SCO, dCO__ and __AOF__ see "Condenser parameters" on page 68.

Water-cooled condenser

- **CoM** = 4: ON/OFF. The water solenoid is always active when the packaged unit is on. The water solenoid is only deactivated during defrost.
- **CoM** = 5: flow rate control. The water solenoid is regulated according to the regulation condensing pressure value to keep it at the setpoint value. The water solenoid is only deactivated during defrost.

8.5 Service parameters

8.5.1 List of installer parameters

SEr > InS

Parameter	Description	Options	Unit of measure	Range	Default
SBI	Enable Vacuum function				0
Chd	Select the HMI type	0 - pLed 1 - pGD	-	0...1	0

8.6 Regulation parameters

8.6.1 List of cooling parameters

rEG > CLd

Parameter	Description	Options	Unit of measure	Range	Default
SEt	Setpoint for cooling		°C/°F	LSE...HSE	0
diF	Differential for cooling		°C/°F	0...99.9	2
OSP			°C/°F	-20.0...20.0	5
brM	Enable the Regultion mode when the regulation probe is broken	0 - No 1 - Yes	-	0...1	1
brC	Time for regulation cycle when the regulation probe is broken		min	0...99	30

8.6.2 OSP parameter

The **OSP** parameter is an offset that can be applied to the setpoint **Set** when the Energy Saving function is enabled from **DI** or **BMS**.

8.6.3 Parameters brM and brC

Parameter **brM** activates the emergency operation if the regulation probe breaks. Operation involves the cyclical switch-on and off of the unit for the time defined by **brC**.

***Note**: the emergency operation cannot be set as a standard setting or for long times.*

8.6.4 List of neutral zone parameters

rEG > NZ

Parameter	Description	Options	Unit of measure	Range	Default
dn2	Differential for Neutral zone		°C/°F	0...99.9	2

Parameter	Description	Options	Unit of measure	Range	Default
dhE	Differential for Heating		°C/°F	0...99.9	2

8.6.5 Parameter dnZ

It defines the interval around the **Set** temperature, within which the cooling demand and the heating demand are reset.

8.6.6 List of humidification/dehumidification parameters

rEG > HUM

Parameter	Description	Options	Unit of measure	Range	Default
ShU	Setpoint Humidify		%	LHU...HHU	80
dhU	Differential for cumidify		%	0...99.9	10
SdE	Setpoint Dehumidify		%	LDE...HDE	30
ddE	Differential for Dehumidify		%	0...99.9	10

8.7 Compressor parameters

8.7.1 List of pressure parameters

CMP > PrE

Parameter	Description	Options	Unit of measure	Range	Default
SPr	Setpoint Pressure for Compressor regulation		bar/psi	LPR...HPR	0.8
dPr	Differential Pressure for Compressor regulation		bar/psi	0...99.9	0.4
iPr	Integral Time for Compressor regulation PID		s	0...999	100
tPd	Threshold for Pump-Down stop from LP Pressure Probe (BPL)		bar/psi	A65...99.9	1.4
dPd	Differential for Pump-Down stop from LP Pressure Probe (BPL)		bar/psi	0...99.9	0.3
toP	Time Out for Pump-Down function stop		min	0...999	5

8.7.2 List of timing parameters

CMP > tME

Parameter	Description	Options	Unit of measure	Range	Default
0d0	Delay Unit at start up and after blackout		s	0...999	60

8.7.3 List of cooling parameters

CMP > CLd

Parameter	Description	Options	Unit of measure	Range	Default
A0C	Minimum value for Compressor Analog output		%	0...100	0

8.8 Condenser parameters

8.8.1 List of regulation parameters

Cnd > rEG

Parameter	Description	Options	Unit of measure	Range	Default
SC0	Setpoint Pressure for Condenser fans regulation		bar/psi	LCO...HCO	12
dC0	Differential for Condenser fans regulation		bar/psi	0...99.9	2
iC0	Integral Time for for Condenser fans regulation PID		s	0...999	100
EFC	Enable the Floating Condensing function	0 - Disable 1 - Yes	-	0...1	0
dFC	Differential value for Floating Condensing function		K	-99.9...99.9	2

8.8.2 Parameter EFC

Floating condensation

In floating condensation, condensation regulation is not linked to the value of parameter **SCO**, but the threshold value changes according to the ambient temperature.

***Note**: the floating condensation is only used with air condensation and requires an ambient temperature probe to be installed.*

8.8.3 List of analog output parameters

Cnd > AOM

Parameter	Description	Options	Unit of measure	Range	Default
AOF	Minimum value for Compressor Analog output		%	0...100	30
Sut	Speed Up time for Condenser fans Analog output		s	0...999	0

8.8.4 Parameter Sut

Useful in the case of traditional fans which need more electric current at start-up. The value of the analog output of the condenser fans is forced to the maximum for the set time, at the end of which, the value of the analog output returns to the regulation value.

8.9 Defrost parameters

8.9.1 List of parameters

dEF > dFr

Parameter	Description	Options	Unit of measure	Range	Default
dtY	Select the Defrost type	0 - None 1 - Clock 2 - Interval 3 - Smart Defrost	-	0...3	2
dSM	Select the Defrost mode	1 - Hot Gas 2 - Heaters 3 - Static	-	0...3	1
dEM	Select the End Defrost mode	1 - for Time out 2 - for Temperature and for Time out	-	0...2	2
d2E	Select the defrost mode for 2 evaporators	1 - Contemporary 2 - Sequential	-	1...2	1
dit	Interval time between 2 defrost starts		h/min	0...999	6
d1	Enable and set time for Defrost 1		-	-	0
d2	Enable and set time for Defrost 2		-	-	0
d3	Enable and set time for Defrost 3		-	-	0
d4	Enable and set time for Defrost 4		-	-	0
d5	Enable and set time for Defrost 5		-	-	0

Parameter	Description	Options	Unit of measure	Range	Default
d6	Enable and set time for Defrost 6		-	-	0
d7	Enable and set time for Defrost 7		-	-	0
d8	Enable and set time for Defrost 8		-	-	0
d9	Enable and set time for Defrost 9		-	-	0
d10	Enable and set time for Defrost 10		-	-	0
dt1	End Defrost temperature for Evaporator 1		°C/°F	-99.9...99.9	5
dS1	Time out Defrost for Evaporator 1		min/s	0...999	15
dt2	End Defrost temperature for Evaporator 2		°C/°F	-99.9...99.9	10
dS2	Time out Defrost for Evaporator 2		min/s	0...999	15
db0	Enable Defrost after Blackout	0 - No 1 - Yes	-	0...999	0
tb0	Minimum Blackout time for Defrost start		min	0...999	60
d0H	Delay first Defrost after Start up		min	0...999	0
ddL	Select the HMI view during Defrost status	1 - "DFR" label fixed in HMI 2 - Coldroom regulation temperature 3 - Coldroom regulation temperature fixed at defrost start	-	1...3	1
tb1	Select the time bases for Defrost time out and interval	0 - Interval in hours/ Time out in minutes 1 - Interval in minutes/ Time out in seconds	-	0...1	0
tdc	Waiting time before to skip defrost in interval type		min	0...999	15
dt	Drip time		min	0...999	3
drH	Pre/Delay activation time for Drain heater		min	0...999	5

8.9.2 Parameters d1 ... d10

Parameters **d1** to **d10** allow you to set up to 10 different times to activate defrost. Activate the timed defrost by setting parameter **dtY** = 1.

8.9.3 Parameter dOH

When the packaged unit starts, the controller cancels a defrost cycle if it is set to start in a shorter time than that set by parameter **dOH**.

8.9.4 Parameter tdc

Defrosting is subject to conditions which prevent it from starting if not fully met. If the defrost is not started, the controller waits for the operation to start within a time defined by parameter **tdc**. If after this time defrosting has not started, the controller cancels the operation and displays an alarm for 5 seconds.

8.9.5 Parameter drH

For all types of defrost. Sets the advance time in which the drain heaters, if configured, are activated with respect to the start-up of defrost. The same time interval is used to command the switch-off of the drain heaters after the end of defrosting.

In case of manual defrost, the drain heaters are activated the same time as defrost and deactivated after the **drh** time, when defrosting is completed.

8.10 Evaporator fan parameters

FAn

8.10.1 List of parameters

Parameter	Description	Options	Unit of measure	Range	Default
FPM	Select the Evaporators fans regulation mode	1 - Always ON 2 - Only during cooling regulation 3 - Only during all regulations	-	1...3	2
FPb	Select the probe for Evaporator fans regulation	1 - Evaporator temperature 2 - With Evaporator Sature temperature (from BPL)	-	1...2	2
FS1	Threshold Temperature for Evaporator Fans 1 stop		°C/°F	-99.9...99.9	10
dF1	Differential for Activation Evaporator fans 1		°C/°F	0...99.9	5
FS2	Threshold Temperature for Evaporator Fans 2 stop		°C/°F	-99.9...99.9	10
dF2	Differential for Activation Evaporator fans 2		°C/°F	0...99.9	5
Fdt	Post - drip time	#N/A	min	0...999	1
dFd	Enable Evaporator fans works during Defrost status	0 - No 1 - Yes	-	0...1	0
EFS	Enable Evaporator fans cycle during Standby status	0 - No 1 - Yes	-	0...1	0

8.10.2 Parameter Fdt

After the dripping stage, the fans remain deactivated, even in the presence of activation commands, for the time set in parameter **Fdt**.

8.11 Electronic valve parameters

8.11.1 List of regulation parameters

EEV > REG

Parameter	Description	Options	Unit of measure	Range	Default
SSH	Superheat setpoint		K	-99.9...99.9	6
GSH	PID: Proportional gain		-	0.0...999.0	15
iSH	PID: Integral time		s	0.0...999.0	100
dSH	PID: Derivative time		s	0.0...999.0	2
Pdd	Delay time after Defrost status		min	0...999	5
CP1	Valve opening at Start up		%	0...100	50
CP2	Pre-positioning time		s	0...999	6
PSb	Valve position in Standby status		%	0...100	0

8.11.2 Adjusting the delay after defrost (Pdd)

Following a defrost cycle, the reading of the overheating value can be distorted by the temperature reached by the parts of the packaged unit during the process.

The **Pdd** parameter sets a time interval at the end of the defrost cycle, during which the electronic valve is blocked with the opening set by the **CP1** parameter, to avoid unwanted tripping of the protections. Once this time interval elapses, the electronic valve function is restored.

8.11.3 List of parameters for the protections

EEV > PrO

Parameter	Description	Options	Unit of measure	Range	Default
P7	Low Superheat Protection: Threshold		K	-99.9...99.9	2
P8	Low Superheat Protection: Integral Time		s	0.0...999.0	10
P9	Low Superheat Protection: Alarm Delay		s	1...999	120
PL1	Low Operating Pressure Protection: Threshold		°C/°F	-99.9...99.9	-20
PL2	Low Operating Pressure Protection: Integral Time		s	0.0...999.0	10

Parameter	Description	Options	Unit of measure	Range	Default
PL3	Low Operating Pressure Protection: Alarm Delay		s	1...999	120
Pn1	Max Operating Pressure Protection: Threshold		°C/°F	-99.9...99.9	10
Pn2	Max Operating Pressure Protection: Integral Time		s	0.0...999.0	20
Pn3	Max Operating Pressure Protection: Alarm Delay		s	1...999	120

8.12 Electronic valve protections

Protection	Description of the protection	Task	Reset
LOW_SH	Low overheating	Valve closure	Immediate
LOP	Low evaporation pressure	Valve opening	Immediate
MOP	High evaporation pressure	Valve closure	Controlled

8.12.1 Low overheating protection

The low overheating protection trips when the overheating value is too low and there is a risk of liquid returning to the compressor.

The protection actuates the electronic valve and commands its partial closure. The degree of closure of the valve and the tripping time are controlled by the difference between the detected overheating temperature value (SH) and the low heating protection threshold (LOW_SH_TH).

The low heating protection threshold value must be less than or equal to the overheating setpoint **SSH** to prevent the low heating protection from tripping during correct operation.

The following graph shows the tripped low heating protection:

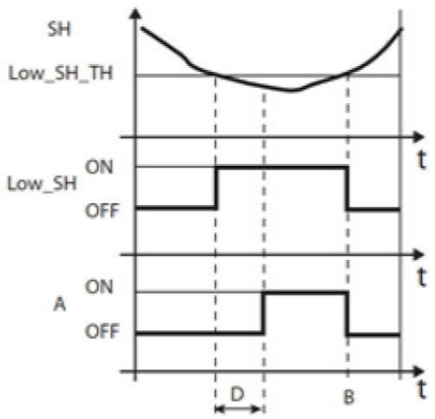

Quantity	Description	Parameter
SH	Overheating	-
LOW_SH_TH	Low overheating protection threshold	P7
LOW_SH	Low heating protection	-
B	Automatic alarm reset	-

Quantity	Description	Parameter
A	Alarm	-
D	Alarm delay	**P9**
t	Time	-

8.12.2 Low evaporation pressure protection

The low evaporation pressure protection (LOP) trips when the evaporation temperature is too low, to prevent the compressor from stopping due to the tripped low pressure switch.

This protection is particularly useful in multistage systems during the starting stage or if there is an increase in the cooling demand, where the evaporation temperature tends to drop quickly.

The value to be entered as parameter **PL1**, low evaporation pressure protection threshold, is the saturated evaporation temperature, which the controller uses to trace the pressure value.

The value of **PL1** must be lower than the nominal evaporation temperature of the machine and higher than the calibration value of the low pressure switch.

The protection actuates the electronic valve, commanding the opening action and increasing the pressure to prevent the low pressure switch from tripping. The opening degree of the valve and the tripping time are controlled by the difference between the detected evaporation temperature value (T_EVAP) and the low evaporation pressure protection threshold (LOP_TH).

The alarm triggered by the low evaporation pressure protection (id = **37**) can also indicate a refrigerant leak from the circuit and the consequent drop in the evaporation temperature.

The following chart shows the tripped low evaporation pressure protection:

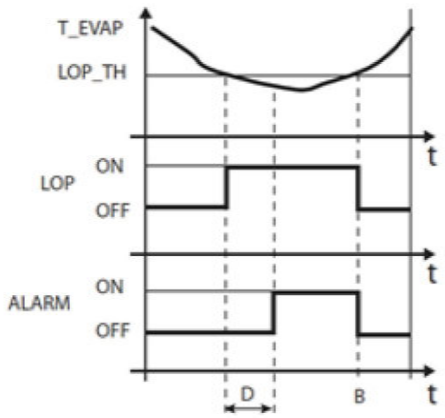

Quantity	Description	Parameter
T_EVAP	Evaporation temperature	-
LOP_TH	Low evaporation pressure protection threshold	**PL1**
LOP	Low evaporation pressure protection	-
B	Automatic alarm reset	-
ALARM	Alarm	-
D	Alarm delay	**PL3**
t	Time	-

8.12.3 High evaporation pressure protection

The high evaporation pressure protection trips when the evaporation temperature is too high. An excessive evaporation temperature can lead to an overload in the compressor and the possible tripping of the thermal protections.

The high evaporation pressure protection threshold **PM1** is the saturated evaporation temperature, which the controller uses to trace the pressure value.

The protection actuates the electronic valve and commands its partial closure.

The value of **PM1** must be higher than the nominal evaporation temperature of the machine to avoid unwanted high evaporation pressure protection actions.

The action on the electronic valve is not intended to eliminate the failure, but to keep the evaporation temperature below the threshold value.

The failure will only be resolved by decreasing the refrigeration load request.

During the action of the high evaporation pressure protection, overheating regulation is disabled to allow the electronic valve to limit the evaporation temperature.

The following chart shows the tripped high evaporation pressure protection:

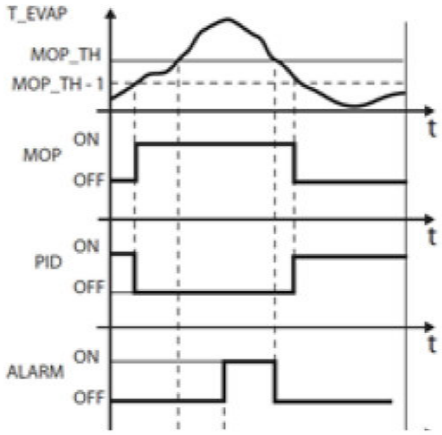

Quantity	Description	Parameter
T_EVAP	Evaporation temperature	**-**
MOP	High evaporation pressure protection	**-**
MOP_TH	High evaporation pressure protection threshold	**PM1**
PID	Overheating PID control	**-**
ALARM	Alarm	**-**
D	Alarm delay	**PM3**
t	Time	**-**

8.13 Coldroom light and door switch parameters

dOL

8.13.1 List of parameters

Parameter	Description	Options	Unit of measure	Range	Default
ddn	Select the Door Open management	0 - Compressor ON/Evap. Fans ON when the door is open	-	0...3	1
		1 - Compressor OFF/Evap. Fans OFF when the door is open			
		2 - Compressor OFF/Evap. Fans ON when the door is open			
		3 - Compressor ON/Evap. Fans OFF when the door is open			

Parameter	Description	Options	Unit of measure	Range	Default
ELd	Enable Coldroom Light ON from Door Switch	0 - No 1 - Yes	-	0...1	1
dCd	Delay Compressor switch OFF when the Door is open		min	0...999	1
dEd	Delay Evap. fans switch OFF when the Door is open		min	0...999	0
dAd	Delay Door open signal		s	0...999	0
dSd	Delay switch OFF the Light after the Door is closed		s	0...999	0

8.14 Parameters of the alarms

8.14.1 Alarm parameters from the inputs

ALM > IN

Alarm parameters from analog inputs

Parameter	Description	Options	Unit of measure	Range	Default
A01	Enable Alarm High Temperature STH	0 - No 1 - Yes	-	0...1	0
A02	Delay Alarm High Temperature STH		min	0...999	0
A03	Threshold Alarm High Temperature STH		°C/°F	-99.9...99.9	99.9
A04	Differential Alarm High Temperature STH		°C/°F	0.0...99.9	10
A05	Enable Alarm High Temperature STA	0 - No 1 - Yes	-	0...1	0
A06	Delay Alarm High Temperature STA		min	0...999	0
A07	Threshold Alarm High Temperature STA		°C/°F	-99.9...99.9	50
A08	Differential Alarm High Temperature STA		°C/°F	0.0...99.9	5
A09	Enable Alarm Low Temperature STA	0 - No 1 - Yes	-	0...1	0
A10	Delay Alarm Low Temperature STA		min	0...999	0
A11	Threshold Alarm Low Temperature STA		°C/°F	-99.9...99.9	-50
A12	Differential Alarm Low Temperature STA		°C/°F	0.0...99.9	5

Alarm parameters from digital inputs

Parameter	Description	Options	Unit of measure	Range	Default
PEn	Max number of PSH Alarms from DI during PEI time		-	0...999	3
PEI	Interval time for counter PSH Alarms from DI		min	0...180	90
A17	Delay EXTERNAL ALARM Alarm from DI		s	0...999	0

Alarm parameters for broken probes

Parameter	Description	Options	Unit of measure	Range	Default
A19	Enable Broken STA probe Alarm	0 - No 1 - Yes	-	0...1	0
A20	Enable Broken STLIQ probe Alarm	0 - No 1 - Yes	-	0...1	0
A21	Enable Broken SHUM probe Alarm	0 - No 1 - Yes	-	0...1	0
A22	Enable Broken SG1 probe Alarm	0 - No 1 - Yes	-	0...1	0
A23	Enable Broken SG2 probe Alarm	0 - No 1 - Yes	-	0...1	0

8.14.2 Operation alarm parameters

EEV > REG

Alarm parameters for open door

Parameter	Description	Options	Unit of measure	Range	Default
dOd	Time Out Door open Alarm		min	0...999	30

Coldroom regulation high temperature alarm parameters

Parameter	Description	Options	Unit of measure	Range	Default
AS1	Delay Alarm High Regulation Temp. at Start up		min	0...999	720
AS2	Delay Alarm High Regulation Temp. during Regulation		min	0...999	0
AS3	Delay Alarm High Regulation Temp. during Door open Alarm		min	0...999	0
AS4	Delay Alarm High Regulation Temp. during Door open		min	0...999	0
AS5	Delay Alarm High Regulation Temp. from Defrost Start		min	0...999	60

Parameter	Description	Options	Unit of measure	Range	Default
A56	Select High Regulation Temp. Alarm mode	0 - Disable 1 - Relative 2 - Absolute	-	0...2	1
A57	Differential for return to High Regulation Temp. Alarm		°C/°F	0...99.9	2
A58	Threshold (Absolute)/ Differentilal (Relative) for High Regulation Temp. Alarm		°C/°F	-99.9...99.9	10

Coldroom regulation low temperature alarm parameters

Parameter	Description	Options	Unit of measure	Range	Default
A59	Delay for Low Regulation Temp. Alarm		min	0...999	0
A60	Select Low Regulation Temp. Alarm mode	0 - Disable 1 - Relative 2 - Absolute	-	0...2	1
A61	Differential for return to Low Regulation Temp. Alarm		°C/°F	0...99.9	2
A62	Threshold (Absolute)/ Differentilal (Relative) for Low Regulation Temp. Alarm		°C/°F	-99.9...99.9	5

Low regulation suction pressure alarm parameters

Parameter	Description	Options	Unit of measure	Range	Default
A63	Select Alarm Priority for Low Regulation BPL Press.	0 - Only Warning 1 - Serious Alarm (block the unit)	-	0...1	0
A64	Delay Alarm for Low Regulation BPL Press.		s	0...999	300
A65	Threshold Alarm for Low Regulation BPL Press.		bar/psi	-99.9...99.9	1.4
A66	Differential Alarm for Low Regulation BPL Press.		bar/psi	0...99.9	0.2

8.14.3 HACCP alarm parameters

ALM > HCP

Parameter	Description	Options	Unit of measure	Range	Default
HCE	Enable the HACCP Alarms	0 - No 1 - Yes	-	0...1	1
HSP	Select the probe for HACCP Alarms	1 - HACCP Probe 2 - Coldroom Regulation probe 3 - Average between the previous options	-	1...3	2

Parameter	Description	Options	Unit of measure	Range	Default
HC1	Select the Alarm Threshold type for High Temperature HACCP	0 - Relative 1 - Absolute	-	0...1	0
HC2	Delay for HACCP High Temperature Alarm		min	0...120	30
HC3	Threshold for Absolute Alarm HACCP High Temperature		°C/°F	-99.9...99.9	20
HC4	Differential for Absolute Alarm HACCP High Temperature		°C/°F	0...99.9	2
HC5	Threshold for Alarm HACCP High Temperature after Blackout		°C/°F	-99.9...99.9	20

***Note**: The HACCP alarms in this application do not replace monitoring and logs as required by law, but are a useful tool for improving the operation of the packaged unit.*

***Note**: parameter **HC1** can only be changed if parameter **HSP** = 3, in all other cases, its value is set automatically.*

8.14.4 Parameter HSP

Triggering of the HACCP high temperature alarm can be managed in three different ways thanks to the **HSP** parameter:

- **HSP**= 1: HACCP probe. The HACCP high temperature alarm is triggered with a delay set in parameter **HC2**, when the temperature recorded by the HACCP probe exceeds the value of threshold **HC3**.

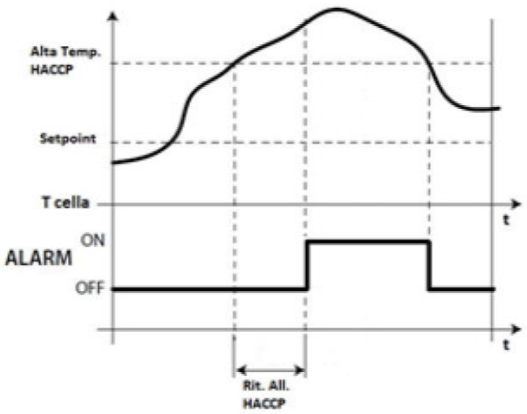

- **HSP** = 2: coldroom regulation probe. The HACCP high temperature alarm is triggered with a delay set in parameter **HC2**, when the temperature recorded by the coldroom regulation probe exceeds the high temperature threshold and remains so for a time equal to the sum of the **HC2** value with the coldroom high temperature delay.

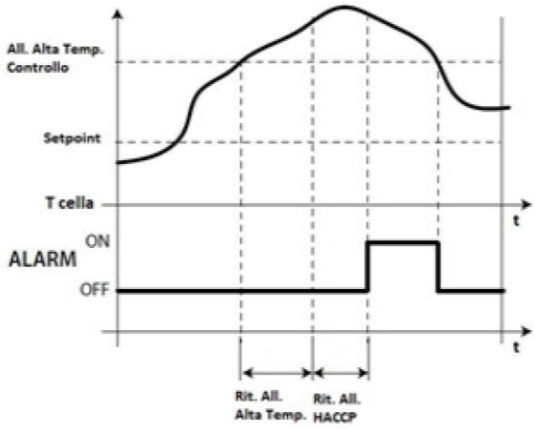

- **HSP**= 3: average between the HACCP probe and the coldroom regulation probe. With **HSP** = 3, the temperature value that triggers the alarm is obtained by finding the average between the value detected by the HACCP probe and that of the coldroom regulation probe. The delay time is set with **HC2**.

8.14.5 Parameter HC5

It is the coldroom temperature threshold to be compared with the temperature value when the power supply is restored following a blackout. If the temperature inside the coldroom is higher than that set in parameter **HC5**, the HACCP high temperature alarm is triggered.

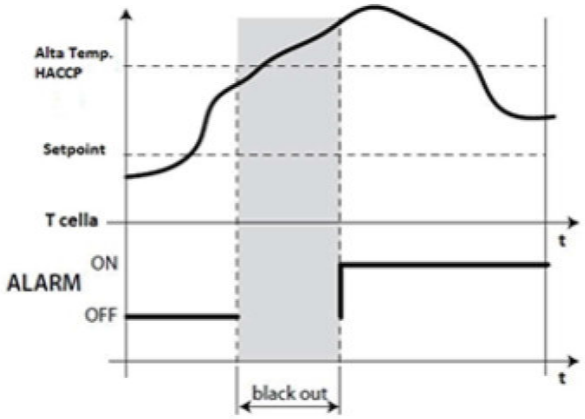

8.14.6 Alarm setting parameters

ALM > ALS

Parameter	Description	Options	Unit of measure	Range	Default
ALb	Enable Buzzer in HMI	0 - No	-	0...1	1
		1 - Yes			
rAL	Reset all Alarms logs	0 - No	-	0...1	-
		1 - Yes			

8.15 General function parameters

8.15.1 List of general alarm parameters

GEF > ALF

Parameter	Description	Options	Unit of measure	Range	Default
EG4	Enable Generic Alarm 1	0 - No	-	0...1	0
		1 - Yes			
AA1	Select the variable for the regulation of Generic Alarm 1	1 - Coldroom Temperature Probe 1	-	1...40	1
		2 - Evaporator Temperature Probe 1			
		3 - Coldroom Temperature Probe 2			
		4 - Evaporator Temperature Probe 2			
		5 - Suction Pressure Probe Circuit 1			
		6 - Condensing Pressure Probe Circuit 1			
		7 - Suction Pressure Probe Circuit 2			
		8 - Condensing Pressure Probe Circuit 2			
		9 - Suction Pressure Probe Circuit 3			
		10 - Condensing Pressure Probe Circuit 3			
		11 - Environment Temperature Probe			
		12 - Suction Temperature Probe			
		13 - Discharge Temperature Probe			
		14 - Liquid Temperature Probe			
		15 - Evaporation Temperature Probe			
		16 -Evaporation Pressure Probe			
		17 - HACCP Temperature Probe			
		18 - Humidity Probe			
		19 - Generic Probe 1			
		20 - Generic Probe 2			
		21 - Regulation Suction Pressure Probe			
		22 - Regulation Condensing Pressure Probe			
		23 - Regulation Coldroom Temperature Probe			
		24 - Cooling Request			
		25 - Heat Request			
		26 - Compressor Request			
		27 - Condenser Request			

Parameter	Description	Options	Unit of measure	Range	Default
		28 - Safety High Pressure Switch from DI			
		29 - Safety Low Pressure Switch from DI			
		30 - Pump-Down Pressure Switch from DI			
		31 - Thermal Protection Compressor 1 from DI			
		32 - Thermal Protection Compressor 2 from DI			
		33 -Thermal Protection Compressor 3 from DI			
		34 - Door Switch from DI			
		35 - ON/OFF from DI			
		36 - ENERGY SAVING from DI			
		37 - Not Used			
		38 - EXTERNAL ALARM from DI			
		39 - Generic DI 1			
		40 - Generic DI 2			
AC1	Select the enabler condition for Generic Alarm 1	1 - Always	-	1...5	1
		2 - Only ON Status			
		3 - Only during RUN Status			
		4 - Only during ALARM Status			
		5 - Only during DEFROST Status			
r1A	Select Direct/Reverse regulation for Generic Alarm 1	0 - Direct	-	0...1	0
		1 - Reverse			
AL1	Threshold for Generic Alarm 1		-	-99.9...99.9	0
dA1	Differential for Generic Alarm 1		-	0...99.9	0
Ad1	Delay for Generic Alarm 1		s	0...999	0
EGS	Enable Generic Alarm 2	0 - No	-	0...1	0
		1 - Yes			

Parameter	Description	Options	Unit of measure	Range	Default
AA2	Select the variable for the regulation of Generic Alarm 1	1 - ST1.1	-	1…40	1
		2 - ST2.1			
		3 - ST1.2			
		4 - ST2.2			
		5 - BPL1			
		6 - BPH1			
		7 - BPL2			
		8 - BPH2			
		9 - BPL3			
		10 -BPH3			
		11 - STA			
		12 - STL			
		13 - STH			
		14 - STLIQ			
		15 - STE			
		16 - BPE			
		17 - HACCP			
		18 - HUM			
		19 - AI GEN1			
		20 - AI GEN2			
		21 - BPL reg			
		22 - BPH reg			
		23 - Temp. Reg.			
		24 - Cooling Request			
		25 - Heat Request			
		26 - Compressor Request			
		27 - Condenser Request			
		28 - PSH from DI			
		29 - PSL from DI			
		30 - PDL from DI			
		31 - CO1 from DI			
		32 - CO2 from DI			
		33 - CO3 from DI			
		34 - SR1 from DI			
		35 - ON/OFF from DI			
		36 - ENERGY SAVING from DI			
		37 - Not Used			
		38 - EXTERNAL ALARM from DI			
		39 - DI GEN1 from DI			
		40 - DI GEN2 from DI			
AC2	Select the enabler condition for Generic Alarm 2	1 - Always	-	1…5	1
		2 - Only ON Status			
		3 - Only during RUN Status			
		4 - Only during ALARM Status			
		5 - Only during DEFROST Status			

Parameter	Description	Options	Unit of measure	Range	Default
r2A	Select Direct/Reverse regulation for Generic Alarm 2	0 - Direct 1 - Reverse	-	0...1	0
AL2	Threshold for Generic Alarm 2		-	-99.9...99.9	0
dA2	Differential for Generic Alarm 2		-	0...99.9	0
Ad2	Delay for Generic Alarm 2		s	0...999	0

8.15.2 Parameters to set general alarms

Up to two general alarms can be set by specifying the following for each:

- enabling
- chosen alarm variable
- enabling conditions
- type of alarm
- alarm threshold
- alarm differential
- alarm delay

8.16 General setting parameters

8.16.1 List of clock parameters (Real time clock)

StG > rtC

Parameter	Description	Options	Unit of measure	Range	Default
rtc	#N/A				

8.16.2 List of supervision parameters

StG > bMS

Parameter	Description	Options	Unit of measure	Range	Default
dEA	Serial Address for BMS port		-	0...255	1
Prt	Protocol type for BMS port	0 - Carel Slave 1 - Modbus Slave 2 - Display com. 3 - PGDX com.	-	0...3	1

Parameter	Description	Options	Unit of measure	Range	Default
bdr	Baudrate for BMS port	0 - 1200	-	0...9	4
		1 - 2400			
		2 - 4800			
		3 - 9600			
		4 - 19200			
		5 - 38400			
		6 - 57600			
		7 - 76800			
		8 - 115200			
		9 - 375000			
btS	Bit Stop for BMS port	1 - 1	-	1...2	1
		2 - 2			
PAr	Parity for BMS port	0 - None	-	0...2	0
		1 - Odd			
		2 - Even			

8.16.3 List of master/slave parameters

StG > nEt

Parameter	Description	Options	Unit of measure	Range	Default
L00	Select the Master or Slave mode	1 - Master	-	1...2	1
		2 - Slave			
L01	Address for Slave mode		-	1...9	1
L02	Number of Slave for Master mode		-	0...9	0
L03	View management for Slave alarm in Master unit	1 - No Slave alarm	-	1...3	3
		2 - View alarm			
		3 - View alarm and use alarm relay			
L04	Enable Set point from Master	0 - No	-	0...1	0
		1 - Yes			
L05	Select the NET Probe	1 - No NET Probe	-	1...3	1
		2 - Regulation Probe from Master			
		3 - Average of Regulation probes of all units available			
L06	Select the Cold Request management	1 - No Management	-	1...3	1
		2 - Contemporary Start up of all Units			
		3 - Sequential Start up of the Units			
L07	Delay time between the Units switch ON for Sequential Start up		s	0...999	10

Parameter	Description	Options	Unit of measure	Range	Default
L08	Select the Defrost management for Master/Slave	1 - No Management 2 - Contemporary Start/ Individual End 3 - Contemporary Start and End 4 - Sequential Start 5 - Sequential Start and No Cold	-	1...5	3
L09	Enable Serious Alarm from Master to Slave	0 - No 1 - Yes	-	0...1	0
L10	Enable Door management from Master to Slave	0 - No 1 - Yes	-	0...1	1
L11	Select the HMI view for all Slaves	1 - No Management 2 - /t1 value + Icons 3 - Only /t1 value	-	1...3	2
L12	Enable On/Off command from Master to Slave	0 - No 1 - Yes	-	0...1	1
L13	Enable Manual Defrost command from Master to Slave	0 - No 1 - Yes	-	0...1	1
L14	Enable Light ON command from Master to Slave	0 - No 1 - Yes	-	0...1	1
L15	Enable Energy Saving command from Master to Slave	0 - No 1 - Yes	-	0...1	1

Master/slave network

Up to 10 packaged units can be connected in master/slave configuration: 1 master + 9 slave.

Below are the parameters that define the master and the slave devices and the parameters that allow the master to control certain important functions of the slave devices:

Parameter	Description	Master setting	Slave setting
L00	Defines the master and slave devices	**1**	**2**
L01	Slave addresses	**-**	**From 1 to 9**
L02	Number of slave devices connected	**from 1 to 9**	**-**

If a slave controlled by a master remains isolated from the network, the operating parameters are those set locally. They will revert to those of the master when the connection is restored.

Centralized management via the master is recommended for all master/slave configurations.

Below is an example of a master/slave configuration:

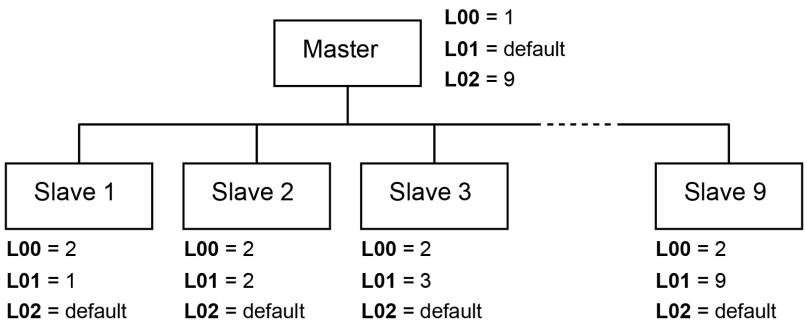

8.16.4 Password change parameters

StG > PWd

Parameter	Description	Options	Unit of measure	Range	Default
PS1	Set new Password for User profile		-	0...9999	2201
PS2	Set new Password for Installer BEST		-	0...9999	2300

8.16.5 Initialization parameters

StG > Inl

Parameter	Description	Options	Unit of measure	Range	Default
rtn	Wipe Retain Memory	0 - No	-	0...1	0
		1 - Yes			
nur	Wipe NVRAM Memory	0 - No	-	0...1	0
		1 - Yes			
rES	Restore the Factory parameters	0 - No	-	0...1	0
		1 - Yes			
nui	Start a new Wizard	0 - No	-	0...1	0
		1 - Yes			

8.16.6 Unit of measurement parameters

StG > UOM

Parameter	Description	Options	Unit of measure	Range	Default
UM1	Select the Unit of Measure for HMI	0 - No	-	0...6	1
		1 - S.I.			
		2 - USA			
		3 - UK			
		4 - Canada			
		5 - Lon			
		6 - S.I. (bar)			
UM2	Select the Unit of Measure for WEB	0 - No	-	0...6	1
		1 - S.I.			
		2 - USA			
		3 - UK			
		4 - Canada			
		5 - Lon			
		6 - S.I. (bar)			

9. Maintenance

This section includes the following topics:

9.1 Maintenance warnings 88
9.2 Maintenance and cleaning performed by the operators 89
9.3 Periodic maintenance 90
9.4 Corrective maintenance 91
9.5 Remove the front panel 91
9.6 Checking or replacing condensing unit components 92
9.7 Checking or replacing evaporating part components 95
9.8 Check or replace components of the electrical box 96

9.1 Maintenance warnings

9.1.1 Required skills

	Mechanical maintenance engineer
	Electrical maintenance engineer

9.1.2 Safety

DANGER! Explosion/Burn. Presence of flammable gas. During maintenance, adopt all the precautions required by legislation in force and the warnings for adjustments and maintenance indicated in this instruction manual.

Low temperatures. During maintenance in the coldroom, take breaks to avoid long exposure to low temperatures.

- Only perform the maintenance described in this instruction manual and observe the indicated maintenance frequency.
- Before carrying out any type of operation, it is necessary to check for propane leaks (R290) with a special gas detector.
- The machines have a factory-sealed refrigerant circuit. At the end of any type of operation that involves the removal/replacement of the gas, it is necessary to seal the circuit hermetically, restoring the factory conditions.
- Failure to reposition the guards at the end of maintenance can cause serious damage. Always refit the guards at the end of maintenance.
- At the end of maintenance, check that there are no tools or components left inside the packaged unit.
- Do not release the products used during maintenance into the environment. Follow the regulations in force regarding the disposal of dangerous and/or polluting fluids.

9.1.3 Isolation from energy sources

Before performing maintenance, disconnect the power plug.

9.1.4 Maintenance on equipment components

Perform maintenance by following the instructions, frequencies and all indications in the manuals and in the attached documentation. If necessary, contact RIVACOLD srl assistance.

9.2 Maintenance and cleaning performed by the operators

9.2.1 Required skills

	Operator

9.2.2 Safety

	Always wear helmets, footwear and protective gloves.

DANGER! Explosion/Burn. Presence of flammable gas. During maintenance, adopt all the precautions required by legislation in force and the warnings for adjustments and maintenance indicated in this instruction manual.

CAUTION! Low temperatures. During maintenance and cleaning in the coldroom, take breaks to avoid long exposure to low temperatures.

Only perform the maintenance and cleaning described in this instruction manual and observe the indicated maintenance frequency.

9.2.3 Daily operations

Task	Component	Procedure	Indicative time [min]
Check	Packaged unit	Check that the packaged unit is in good condition.	5
Cleaning	Evaporating part and condensing unit	Clean as needed.	30

9.2.4 Weekly operations

Task	Component	Procedure	Indicative time [min]
Defrost	Evaporator	If there is ice on the evaporating part: 1. Perform the manual defrost cycle (see "Control panel operations" on page 37). 2. Repeat the procedure until completely defrosted. 3. Check again after 12 hours	-

9.3 Periodic maintenance

9.3.1 Required skills

	Mechanical maintenance engineer
	Electrical maintenance engineer

9.3.2 Safety warnings

	Always wear helmets, footwear and protective gloves.
	Always wear the mask and protective goggles.

9.3.3 Monthly operations

Task	Component	Procedure	Indicative time [min]
Check	Joinery	• Check that all metal surfaces are in good condition • Check that the screws are tightened correctly	10
	Electrical cables	Check that the electrical cables are intact. If any cuts or cracks are found, immediately replace the power cable with a new one.	15
	Refrigeration circuit	Check that the refrigeration circuit is in good condition and that there are NO refrigerant gas leaks. Usually, the presence of lubricating oil indicates leaking refrigerant from the circuit. If in doubt, before carrying out any operation, contact RIVACOLD srl.	30
Cleaning	Evaporator and condenser	Clean as follows: • as needed • if dust or grease is noted	15

9.3.4 Operations every four months

Task	Component	Procedure
Checks, replacements	Electrical box	Check the contactors and replace them if they show signs of deterioration.
	Compressor	Check the noise (see "Check the compressor noise" on page 93)
Cleaning	Electrical box	Clean the fixed and mobile contacts of all the contactors.

9.4 Corrective maintenance

9.4.1 Required skills

	Mechanical maintenance engineer
	Electrical maintenance engineer

9.4.2 Safety

If in doubt, before carrying out any operation, contact RIVACOLD srl.

	Always wear helmets, footwear and protective gloves.
	Always wear the mask and protective goggles.

9.4.3 What to do

In case of damage or a malfunction, consult "Installation and operation troubleshooting" on page 98or Rivacold srl

9.5 Remove the front panel

9.5.1 Required skills

	Mechanical maintenance engineer

9.5.2 Procedure

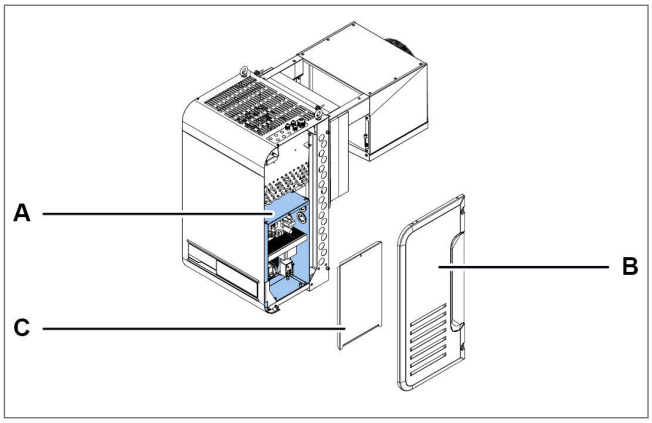

1. Access the electrical box **[A]** by removing the right side panel **[B]** and the electrical box panel **[C]**.

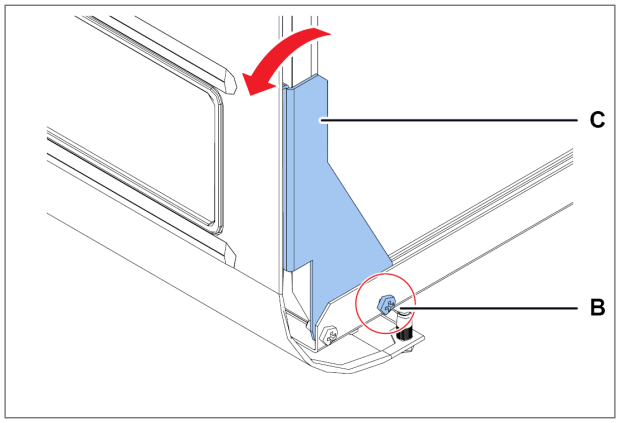

2. On both sides, undo the screws **[B]** and slightly rotate the bracket **[C]**.

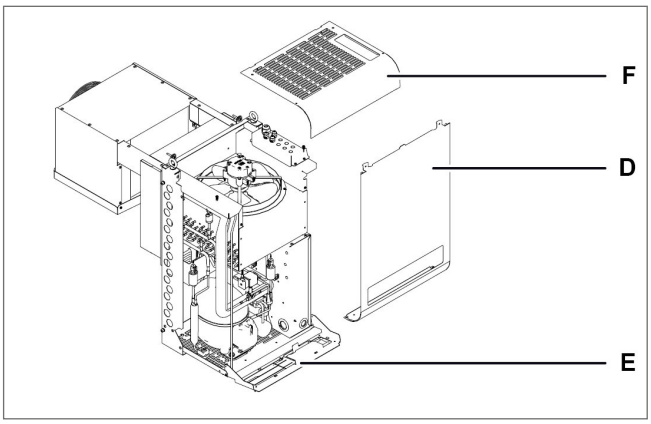

3. Remove the front panel **[D]**.
4. If necessary, lower the controller panel **[E]**.
5. If necessary, remove the top panel **[E]**.

9.6 Checking or replacing condensing unit components

9.6.1 Required skills

	Mechanical maintenance engineer

9.6.2 When to check or replace

Perform this procedure when problems are found on the condensing unit components (see "Installation and operation troubleshooting" on page 98).

9.6.3 Warning

Check or replace the components following the instructions, frequency and all indications in this manual and in the attached documentation. If necessary, contact RIVACOLD srl assistance.

9.6.4 Checking or replacing internal components of the condensing unit

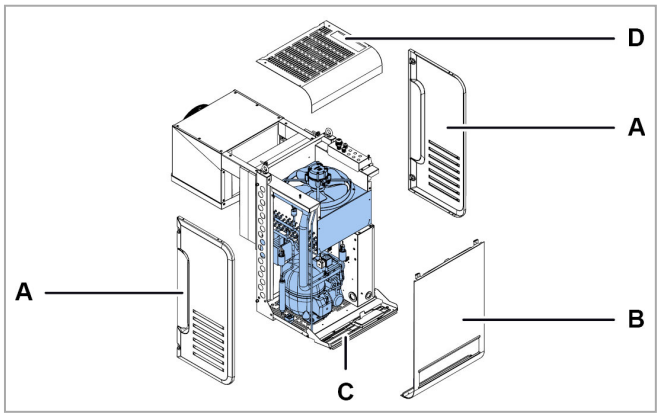

1. Remove the side panels **[A]**.
2. Remove the front panel **[B]** and lower the controller panel **[C]** and if necessary, remove the top panel **[D]** (see "Remove the front panel" on the previous page).
3. Check or replace the internal components of the condensing unit.
4. Set all the panels in place again.

9.6.5 Checking or replacing the condensing fan unit

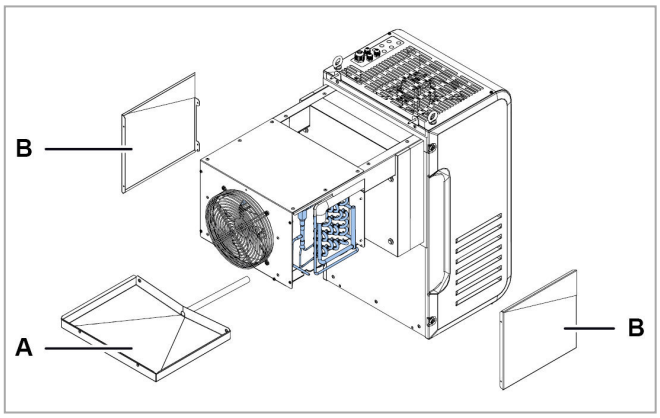

1. Remove the top panel **[A]**.
2. Check or replace the fan unit of the evaporating part **[B]**.
3. If you need to replace the unit, replace and rewire the wiring cable because once removed from the motor, the IP rating is NO longer guaranteed.
4. Set the panel back in place.

9.6.6 Check the condensate drain tray

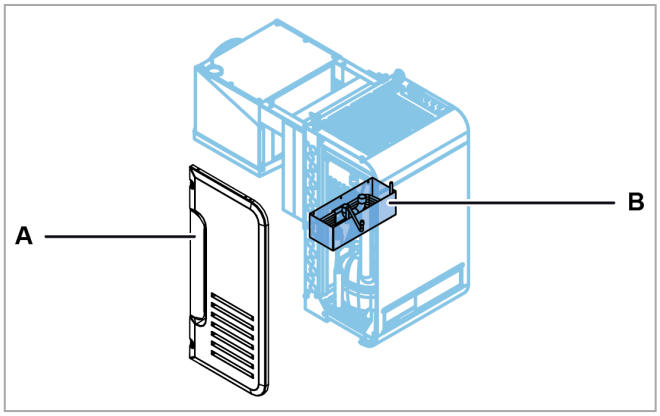

1. Remove the left side panel **[A]**
2. Check the condensate drain tray **[B]**.
3. Set the panel back in place.

9.6.7 Check the compressor noise

1. Turn the packaged unit on.
2. Verify that the compressor does NOT generate vibrations or clicking sounds, that is, sounds generated by short, close, sharp and frequent blows.
3. If the compressor emits or generates vibrations or clicking sounds, it can be broken and must be replaced (see "Replace the compressor" on the next page), or there is mechanical clearance between the parts that must be fixed.

9.6.8 Replace the compressor

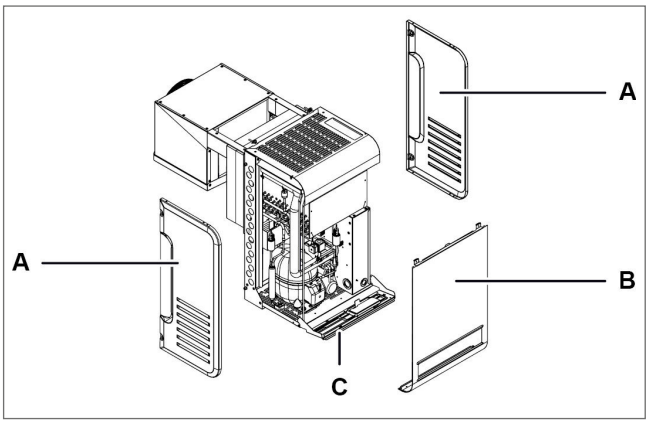

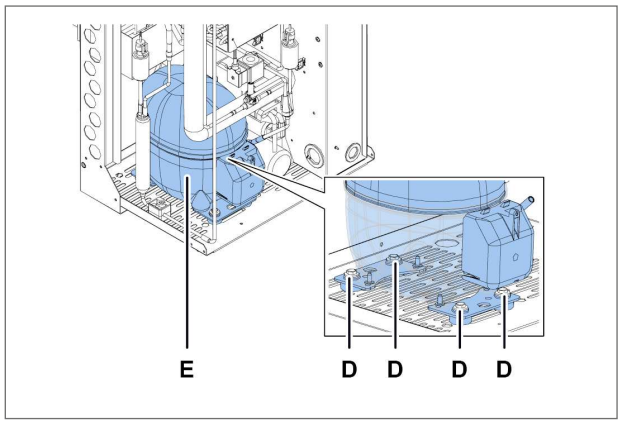

1. Remove the side panels **[A]**.
2. Remove the front panel **[B]** (see "Remove the front panel" on page 91).
3. Lower or if necessary, remove the controller panel **[C]**.
4. Undo the screws **[D]** and remove the compressor **[E]**, removing all the components that prevent its removal.
5. Insert the new compressor, securing it with the screws and put all the other components back in place.
6. Set all the panels in place again.

9.6.9 Put the compressor box back in place

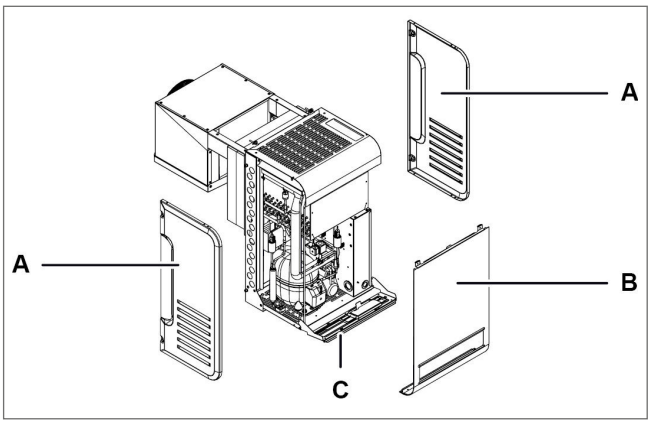

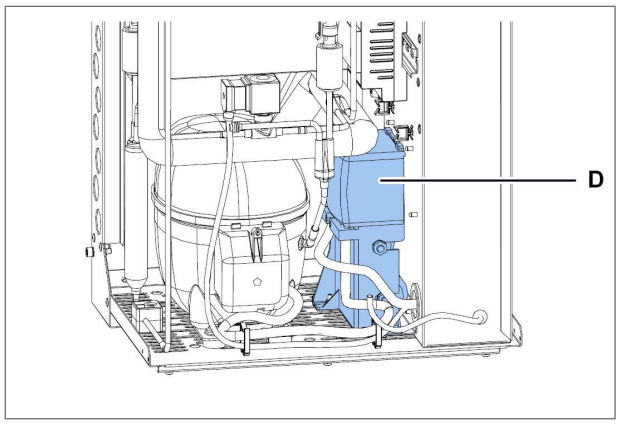

1. Remove the side panels **[A]**.
2. Remove the front panel **[B]** (see "Remove the front panel" on page 91).
3. Lower or if necessary, remove the controller panel **[C]**.
4. Remove the compressor box **[D]**, removing all the components that prevent its removal.

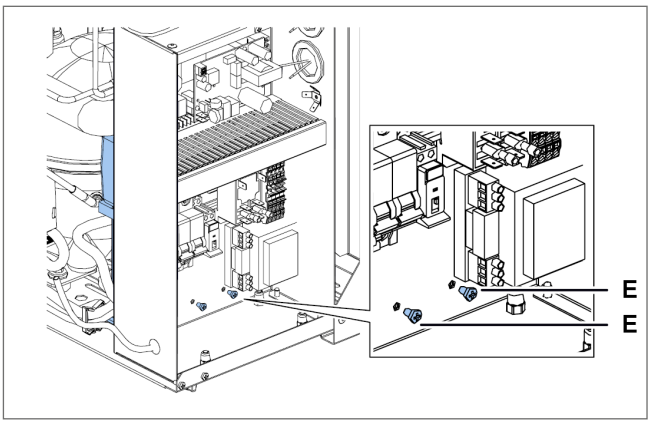

5. For packaged unit size 1 x 250, remove the electrical box cover (see "Check or replace components of the electrical box" on the next page) and remove the screws **[E]**.

9.7 Checking or replacing evaporating part components

9.7.1 Required skills

	Mechanical maintenance engineer

9.7.2 When to check or replace

Perform this procedure when problems are found on the evaporating part components (see "Installation and operation troubleshooting" on page 98).

9.7.3 Warning

Check or replace the components following the instructions, frequency and all indications in this manual and in the attached documentation. If necessary, contact RIVACOLD srl assistance.

9.7.4 Checking or replacing the fan unit

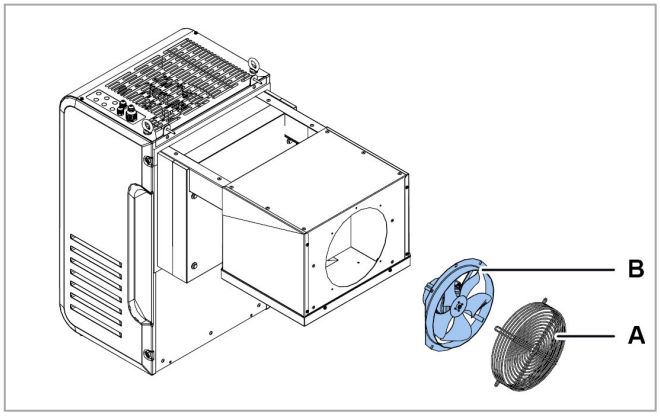

1. Remove the la grid **[A]**.
2. Check or replace the fan unit of the evaporating part **[B]**.
3. If you need to replace the unit, replace and rewire the wiring cable because once removed from the motor, the IP rating is NO longer guaranteed.
4. Put the condenser-fan motor and grid back in place.

9.7.5 Checking or replacing components

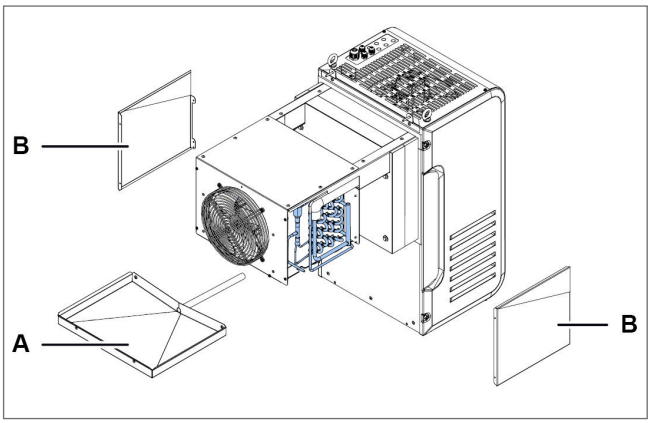

1. If the evaporator tray **[A]** must be replaced, remove it with the side panels **[B]**.

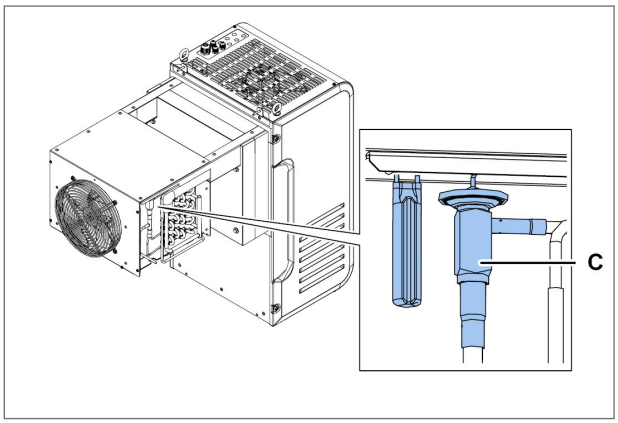

2. Check or replace the thermostatic valve **[C]**.

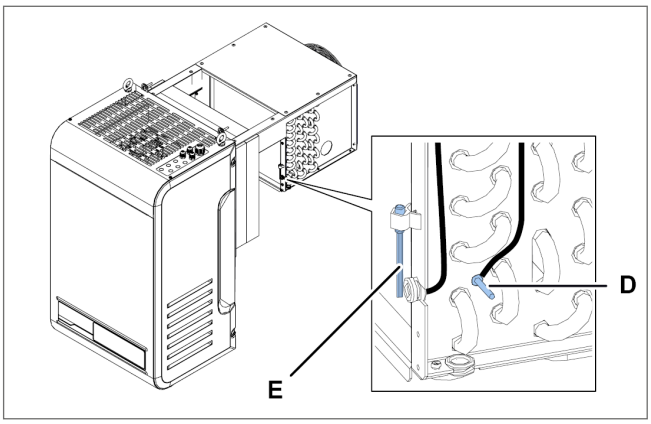

3. Check or replace the fin coil temperature probe **[D]** and the coldroom temperature probe **[E]**.

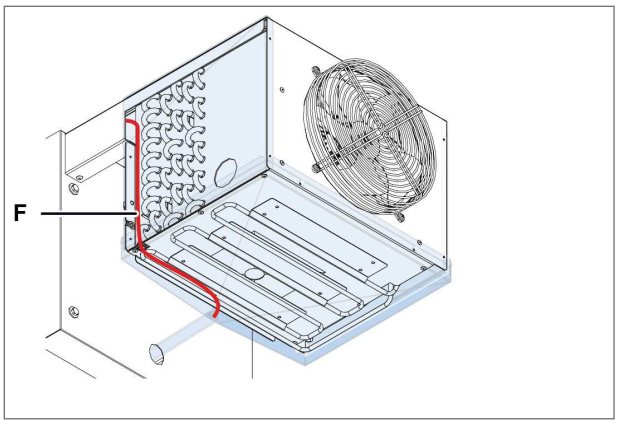

4. Check or replace the drain heater **[F]**.

9.8 Check or replace components of the electrical box

9.8.1 Required skills

	Electrical maintenance engineer

9.8.2 When to check or replace

Perform this procedure when problems are found on the electrical box components (see "Installation and operation troubleshooting" on page 98).

9.8.3 Warning

Check or replace the components following the instructions, frequency and all indications in this manual and in the attached documentation. If necessary, contact RIVACOLD srl assistance.

9.8.4 Access the electrical box

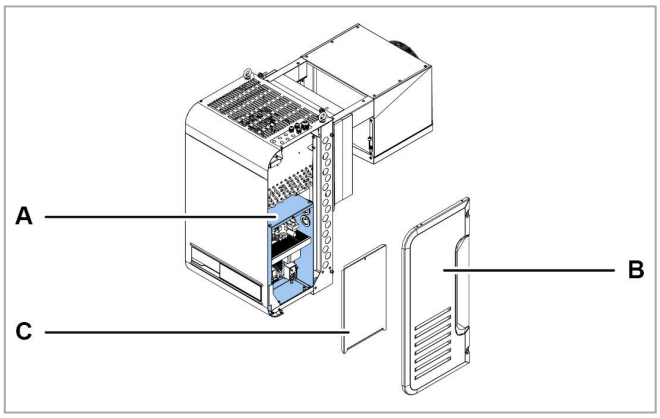

1. Access the electrical box components **[A]** by removing the right side panel **[B]** and the electrical box panel **[C]**.
2. Check or replace the component.

10. Diagnostics

This section includes the following topics:

10.1 Installation and operation troubleshooting 98
10.2 Errors indicated by the controller 100

10.1 Installation and operation troubleshooting

10.1.1 Skills

COMPANY	Manufacturer's personnel
	Mechanical maintenance engineer
	Electrical maintenance engineer
	Operator

10.1.2 Safety warnings

If maintenance is required, follow the instructions and all indications in this manual and in the attachments. If necessary, contact RIVACOLD srl assistance.

	In case of maintenance, wear helmets, footwear and protective gloves.

10.1.3 Causes and solutions

The packaged unit does not start-up

Cause	Solution	Personnel
Power failure	• Check the connection to the mains • Check that there is voltage on the electrical mains and that it conforms to the rated data • Check the state of the circuit breakers on the machine	
The compressor's thermal protection has tripped	Check the integrity and activation state of the compressor circuit breaker on the machine and, if present, the thermal protection on the compressor	
The start capacitor is faulty	Replace the start capacitor.	

Cause	Solution	Personnel
No controller consent to the compressor	• Check the Setpoint (**Set**) and the differential (**diF**). • Load the default setting of the unit.	
Controller consent is present but the compressor is off (**OFF**)	• Check the wiring of the compressor relay on the circuit board and its activation state. If the relay is NOT active, replace the circuit board • Check the wiring of the compressor power relay on the electrical box and its activation state. If the relay is NOT active, replace it	
The electric motor has an interrupted or short-circuited winding	Replace the compressor.	

The compressor is running without consent

Cause	Solution	Personnel
The compressor relay is stuck to the circuit board	Replace the circuit board	
The compressor power relay is stuck to the electrical box	Replace the compressor power relay	

The packaged unit runs continuously or for long periods

Cause	Solution	Personnel
The packaged unit does NOT reach the **Setpoint** temperature and the evaporator fans DO NOT work	• If there is NO controller consent, check the evaporator fan parameters and, if necessary, load the default setting. • If there is controller consent, then, check the wiring of the fans and the relay on the circuit board and its activation state. • If the relay is NOT active, replace the circuit board	
The packaged unit does NOT reach the **Setpoint** temperature	• If the evaporator is blocked with ice, then manually activate the defrost several times (see "Control panel operations" on page 37) until it is completely cleaned • If the condenser is dirty, clean it • Check that the unit is sized correctly for the required thermal load	COMPANY

The condensation water CANNOT evaporate

Cause	Solution	Personnel
The condensing temperature is too low	Activate the limitation of the minimum condensing temperature, modify the **CoM** parameter, bringing it to 2, i.e. air condensing management with On/Off to prevent the condensation from dropping too much	

The suction pipe and the compressor are frosted

Cause	Solution	Personnel
There is a liquid return and the evaporator fans are NOT working	• If there is NO controller consent, check the evaporator fan parameters and, if necessary, load the default setting. • If there is controller consent, then, check the wiring of the fans and the relay on the circuit board together with its activation state. • If the relay is NOT active, replace the circuit board	
Liquid return	Check the overheating value in the evaporator inside the coldroom. If the value is less than 2K, then the thermostatic valve does NOT work and is blocked in the open position and, therefore, must be replaced.	

10.2 Errors indicated by the controller

10.2.1 Skills

COMPANY	Manufacturer's personnel
	Electrical maintenance engineer

10.2.2 Errors

Key (*): A = automatic; M = manual; S = semi-automatic.

ID	Description	Cause	Impact	Resolution	Reset (*)	Relay
Err	HMI communication error	Connection error between the circuit board and HMI	User interface not usable	Check the electrical connections or replace the interface, if necessary	A	No
0	Retain memory writing number error	Fault in the memory of the electronic control	Machine stop due to circuit board fault	Replace the circuit board	M	No
1	Retain memory writing error	Fault in the memory of the electronic control	Machine stop due to circuit board fault	Replace the circuit board	M	No
2	Coldroom temperature probe alarm	Value measured outside the operating ranges Faulty or disconnected sensor	Visual indication only	Check wiring and integrity of the probe and replace it if necessary	A	No

ID	Description	Cause	Impact	Resolution	Reset (*)	Relay
3	Evaporator temperature probe alarm	Value measured outside the operating ranges Faulty or disconnected sensor	Visual indication only	Check wiring and integrity of the probe and replace it if necessary	A	No
4	Coldroom 2 temperature probe alarm	Value measured outside the operating ranges Faulty or disconnected sensor	Visual indication only, evaporator defrost carried out due to Time-out	Check wiring and integrity of the probe and replace it if necessary	A	No
5	Evaporator 2 temperature probe alarm	Value measured outside the operating ranges Faulty or disconnected sensor	Visual indication only, evaporator 2 defrost carried out due to Time-out	Check wiring and integrity of the probe and replace it if necessary	A	No
6	Circuit 1 Suction pressure probe alarm	Value measured outside the operating ranges Faulty or disconnected sensor	If the Leak Function is active, it causes circuit 1 to stop, otherwise only a visual indication is given	Check wiring and integrity of the probe and replace it if necessary	A	Yes
7	Circuit 1 condensing pressure probe alarm	Value measured outside the operating ranges Faulty or disconnected sensor	Visual indication only	Check wiring and integrity of the probe and replace it if necessary	A	No
8	Ambient temperature probe alarm	Value measured outside the operating ranges Faulty or disconnected sensor	Visual indication only. If the Floating Condensing function is enabled, parameter **EFC**=1, this is disabled.	Check wiring and integrity of the probe and replace it if necessary	A	No
9	Suction temperature probe alarm	Value measured outside the operating ranges Faulty or disconnected sensor	Visual indication only	Check wiring and integrity of the probe and replace it if necessary	A	No
10	Discharge temperature probe alarm	Value measured outside the operating ranges Faulty or disconnected sensor	Visual indication only	Check wiring and integrity of the probe and replace it if necessary	A	No
11	Liquid temperature probe alarm	Value measured outside the operating ranges Faulty or disconnected sensor	Visual indication only	Check wiring and integrity of the probe and replace it if necessary	A	No

ID	Description	Cause	Impact	Resolution	Reset (*)	Relay
12	Evaporation temperature probe alarm	Value measured outside the operating ranges Faulty or disconnected sensor	Visual indication only	Check wiring and integrity of the probe and replace it if necessary	A	No
13	Evaporator pressure probe alarm	Value measured outside the operating ranges Faulty or disconnected sensor	Visual indication only	Check wiring and integrity of the probe and replace it if necessary	A	No
14	HACCP temperature probe alarm	Value measured outside the operating ranges Faulty or disconnected sensor	Visual indication only	Check wiring and integrity of the probe and replace it if necessary	A	No
15	General probe 1 alarm	Value measured outside the operating ranges Faulty or disconnected sensor	Visual indication only	Check wiring and integrity of the probe and replace it if necessary	A	No
16	General probe 2 alarm	Value measured outside the operating ranges Faulty or disconnected sensor	Visual indication only	Check wiring and integrity of the probe and replace it if necessary	A	No
17	Humidity probe alarm	Value measured outside the operating ranges Faulty or disconnected sensor	Visual indication only	Check wiring and integrity of the probe and replace it if necessary	A	No
18	High pressure switch alarm	High Pressure Switch alarm triggered, possible causes: Ambient temperature very high Condenser fans not functioning Condenser very dirty	Stopped machine with manual reset if trips are higher than the **PEN** parameter in a time interval less than the **PEI** parameter, otherwise automatic reset.	Check the ambient temperature of the place of installation Clean the condenser Check the operation of the condenser fan motor	S	Yes
19	Low pressure switch alarm	Low pressure switch alarm triggered, possible causes: Refrigerant leak Ice formation in the evaporating coil Broken evaporator fans	Stopped machine	Check that the evaporator fans function properly Check for ice in the evaporator coil Check the refrigerant charge of the unit	A	Yes

ID	Description	Cause	Impact	Resolution	Reset (*)	Relay
20	Compressor 1 alarm	Compressor 1 alarm triggered, possible causes: circuit breaker or dedicated thermal protector tripped Compressor overheating or short circuit	Circuit 1 block	Check the condition of the compressor	A	Yes
21	Compressor 2 alarm	Compressor 2 alarm triggered, possible causes: circuit breaker or dedicated thermal protector tripped Compressor overheating or short circuit	Circuit 2 block	Check the condition of compressor 2	A	Yes
22	External alarm	External alarm triggered	Stopped machine	Check the digital input configured with this alarm and the relative activating contact.	A	Yes
23	High discharge temperature alarm	High discharge temperature alarm triggered, possible causes: high overheating, high condensing temperature	Stopped machine	Check the condensing and overheating of the unit (gas charge)	A	Yes
24	High ambient temperature alarm	Ambient temperature above threshold **A07**	Visual indication only	Check that the detected temperature matches that displayed	A	Yes
25	Low ambient temperature alarm	Ambient temperature below threshold **A11**	Visual indication only	Check that the detected temperature matches that displayed	A	No
26	Generic digital input 1 alarm	Connected device tripped	Visual indication only	Check the condition of the configured Digital input	A	No
27	Generic digital input 1 alarm	Connected device tripped	Visual indication only	Check the condition of the configured Digital input	A	No
28	Open door timeout alarm	Door open for longer than parameter **dOd**	Machine restart according to user programming	Close the coldroom door or check the door switch connection	A	No
29	Circuit 2 Suction pressure probe alarm	Value measured outside the operating ranges Faulty or disconnected sensor	If the Leak Function is active, it causes circuit 2 to stop, otherwise only a visual indication is given	Check wiring and integrity of the probe and replace it if necessary	A	No

ID	Description	Cause	Impact	Resolution	Reset (*)	Relay
30	Circuit 2 condensing pressure probe alarm	Value measured outside the operating ranges Faulty or disconnected sensor	Visual indication only	Check wiring and integrity of the probe and replace it if necessary	A	No
31	Circuit 3 Suction pressure probe alarm	Value measured outside the operating ranges Faulty or disconnected sensor	If the leak function is active, it causes circuit 3 to stop, otherwise only a visual indication is given	Check wiring and integrity of the probe and replace it if necessary	A	No
32	Circuit 3 condensing pressure probe alarm	Value measured outside the operating ranges Faulty or disconnected sensor	Visual indication only	Check wiring and integrity of the probe and replace it if necessary	A	No
33	Compressor 3 alarm	Compressor 3 alarm triggered, possible causes: circuit breaker or dedicated thermal protector tripped Compressor overheating or short circuit	Circuit 3 block	Check the condition of compressor 3	A	Yes
34	Defrost not performed alarm	Evaporator temperature higher than the defrost end value	Defrost not performed, visual indication for 5 seconds and unit proceeds with its standard operating cycle	Check parameter **dT1** or **dT2**	A	No
35	Blackout alarm	Power failure for more than 1 minute	Visual indication, if blackout lasts longer than parameter **tbO** forced defrost starts	Check power source or electrical connections	M	No
36	Low overheating protection	Overheating too low, below threshold **P7** for longer than **P9**	The valve closing intensity is increased: the more the overheating drops below the threshold, the greater the valve closing intensity will be. The LowSH threshold must be less than or equal to the overheating setpoint. The low overheating integral time indicates the intensity of the reaction: the lower it is, the greater the intensity of the reaction.	Check that the compressor, the thermostatic valve and the low pressure and suction temperature transducers function properly. Check parameters **P7**, **P8**, **P9**.	A	No

ID	Description	Cause	Impact	Resolution	Reset (*)	Relay
37	Evaporation temperature low protection	Evaporating temperature too low, below threshold **PL1** for longer than **PL3**	The valve opening intensity is increased. The further the temperature drops below the threshold, the greater the valve opening intensity will be. The integral time indicates the intensity of the action: the lower it is, the greater the intensity.	Check that the thermostatic valve and evaporator fans function properly. Check for ice on the evaporator coil. Check parameters **PL1**, **PL2**, **PL3**	A	No
38	High evaporation temperature protection	Evaporating temperature too high, above threshold **PM1** for longer than **PM3**	Closing of the electronic valve in a controlled manner, which implies abandoning the overheating regulation, and its increase. The protection will therefore have a moderate reaction that tends to limit the increase in evaporation temperature, keeping it below the operating threshold, trying to increase the overheating as little as possible.	Cooling demand too high or check that the compressor and thermostatic valve function properly. Check parameters **PM1**, **PM2**, **PM3**	A	No
39	High condensing temperature protection	Condensing temperature too high	Moderate closure of the valve and relative increase in overheating	Check that the condenser-fan functions Clean the condensing coil	A	No
40	Low intake temperature alarm	Low suction temperature	Visual indication only		A	No
41	EEV motor error	Faulty valve motor or no connection	EEV valve regulation interrupted	Check the connections and the condition of the motor. Switch the circuit board off and back on	A	No
42	Ineffective adaptive control	Valve tuning failed	Visual indication only	Check the setting of parameter **PrE**	A	No
43	EEV emergency closure alarm	Power failure and valve closed in emergency due to power supply from an external source (Ultracap or UPS)	EEV valve regulation interrupted	Check the power supply of the circuit board	A	No
44	Error in the EEV range of parameters	Error in EEV Driver parameterization	Visual indication only	Check the parameters of the EEV unit	A	No
45	Error in the EEV service position percentage	Manual forcing value outside the 0-100% range	Interruption of manual valve forcing	Check the value of parameter **PMu**	A	No

ID	Description	Cause	Impact	Resolution	Reset (*)	Relay
46	EEV valve ID error	Error in EEV Driver parameterization	Visual indication only	Check parameters **PVt** and **PVM**	A	No
47	Circuit 1 gas leak alarm	Probable refrigerant leak in circuitry 1	Circuit 1 block	Check the circuitry and verify whether there is a refrigerant leak	M	Yes
48	Circuit 2 gas leak alarm	Probable refrigerant leak in circuitry 2	Circuit 2 block	Check the circuitry and verify whether there is a refrigerant leak	M	Yes
49	Circuit 3 gas leak alarm	Probable refrigerant leak in circuitry 2	Circuit 3 block	Check the circuitry and verify whether there is a refrigerant leak	M	Yes
50	HACCP alarm after blackout	After a blackout lasting more than one minute, the measured HACCP Temperature is above threshold **HC5**	Visual indication, event saved in the relative HACCP LOG and in the HACCP alarm log	Check the operating condition of the unit, whether the door is open or modify the tripping thresholds	A	No
51	HACCP alarm	HACCP temperature above the set threshold, parameter **HC3** if **HC1**=0 or alarm ***53*** if **HC1**=1, for longer than **HC2**	Visual indication, event saved in the relative HACCP LOG and in the HACCP alarm log	Check the operating condition of the unit, whether the door is open or modify the tripping thresholds	A	No
52	High regulation temperature alarm	Regulation Temperature above the set threshold, parameter **A58** if **A56**=2 or **SET+A58** if **A56**=1.	Visual indication only	Check whether the regulation temperature is consistent with that measured and if necessary, modify tripping threshold ***A58***	A	Yes
53	Low regulation temperature alarm	Regulation Temperature above the set threshold, parameter **A62** if **A56**=2 or **SET+A62** if **A56**=1.	Visual indication only	Check whether the regulation temperature is consistent with that measured and if necessary, modify tripping threshold **A62**	A	Yes
54	Pump-down stop alarm for maximum time	The compressor has made more than 5 pump-down stops in a time shorter than that given by the sum of parameters **Cit** - **dOF** - **toP** multiplied by 5, like the number of stops considered for the alarm.	Stopped machine	Check the pump-down stop threshold **tPd** and the relative differential **dPd**. Check for any liquid leak in the suction line.	A	Yes
55	Compressor general alarm	All the compressors in the unit are in alarm state	Stopped machine	Check the condition of the compressors in the unit	A	Yes

ID	Description	Cause	Impact	Resolution	Reset (*)	Relay
56	General gas leak alarm	Probable refrigerant leak in the unit circuitry or evaporator blocked with ice	Stopped machine	Check the circuitry and whether there is a leak or check the condition of the evaporator, probably blocked with ice	M	Yes
57	Regulation temperature probe alarm	Probe(s) used for regulation in alarm state	Stopped machine, emergency cycle starts if activated	Check probe alarms and verify their state and connections	A	Yes
58	Regulation suction pressure probe alarm	Probe(s) used for regulation in alarm state	Visual indication only, if the Leak function or parameter **A63**=1 is enabled, the machine is stopped	Check probe alarms and verify their state and connections	A	Yes
59	Regulation condensing pressure probe alarm	Probe(s) used for regulation in alarm state	Condenser fans forcing at 100%. Visual indication only, if parameter **A67**=1 and **A71**=1 the machine is stopped	Check probe alarms and verify their state and connections	A	Yes
60	Evaporator fan regulation probe alarm	Probe(s) used for regulation in alarm state	Visual indication only, evaporator fans run continuously	Check probe alarms and verify their state and connections	A	No
61	Evaporator 2 fan regulation probe alarm	Probe(s) used for regulation in alarm state	Visual indication only, evaporator 2 fans run continuously	Check probe alarms and verify their state and connections	A	No
62	Regulation low suction pressure alarm	Suction Pressure below the threshold set in parameter **A65**	If parameter **A63**=1 the machine is stopped, otherwise, visual indication only	Check whether the pressure in the circuit is consistent with that measured and if necessary, modify tripping threshold **A65**	A	Yes
63	Regulation condensing high pressure alarm	Condensing pressure above the threshold set in parameter **A69**	Condenser fans forcing at 100%. If parameter **A67**=1 the machine is stopped, otherwise, visual indication only	Check whether the pressure in the circuit is consistent with that measured and if necessary, modify tripping threshold **A69**	A	Yes
64	Regulation condensing low pressure alarm	Condensing pressure below the threshold set in parameter **A73**	If parameter **A71**=1 the machine is stopped, otherwise, visual indication only	Check whether the pressure in the circuit is consistent with that measured and if necessary, modify tripping threshold **A73**	A	No
65	Safety defrost probe alarm	Probe(s) used for the safety defrost function in alarm state	Deactivation of the safety defrost function	Check probe alarms and verify their state and connections	A	No
66	General alarm probe 1 alarm	Probe(s) used for the generic function in alarm state	Deactivation of the generic function	Check probe alarms and verify their state and connections	A	No

ID	Description	Cause	Impact	Resolution	Reset (*)	Relay
67	General alarm probe 2 alarm	Probe(s) used for the generic function in alarm state	Deactivation of the generic function	Check probe alarms and verify their state and connections	A	No
68	General analog output probe alarm	Probe(s) used for the generic function in alarm state	Deactivation of the generic function	Check probe alarms and verify their state and connections	A	No
69	General digital output probe 1 alarm	Probe(s) used for the generic function in alarm state	Deactivation of the generic function	Check probe alarms and verify their state and connections	A	No
70	General digital output probe 2 alarm	Probe(s) used for the generic function in alarm state	Deactivation of the generic function	Check probe alarms and verify their state and connections	A	No
71	Alarm on slave unit 1	Serious alarm in progress in slave unit 1	Slave unit in alarm state not considered by the master in the master/slave functions	Check the slave unit in alarm state and check the alarm in progress	A	Yes
72	Alarm on slave unit 2	Serious alarm in progress in slave unit 2	Slave unit in alarm state not considered by the master in the master/slave functions	Check the slave unit in alarm state and check the alarm in progress	A	Yes
73	Alarm on slave unit 3	Serious alarm in progress in slave unit 3	Slave unit in alarm state not considered by the master in the master/slave functions	Check the slave unit in alarm state and check the alarm in progress	A	Yes
74	Alarm on slave unit 4	Serious alarm in progress in slave unit 4	Slave unit in alarm state not considered by the master in the master/slave functions	Check the slave unit in alarm state and check the alarm in progress	A	Yes
75	Alarm on slave unit 5	Serious alarm in progress in slave unit 5	Slave unit in alarm state not considered by the master in the master/slave functions	Check the slave unit in alarm state and check the alarm in progress	A	Yes
76	Alarm on slave unit 6	Serious alarm in progress in slave unit 6	Slave unit in alarm state not considered by the master in the master/slave functions	Check the slave unit in alarm state and check the alarm in progress	A	Yes
77	Alarm on slave unit 7	Serious alarm in progress in slave unit 7	Slave unit in alarm state not considered by the master in the master/slave functions	Check the slave unit in alarm state and check the alarm in progress	A	Yes
78	Alarm on slave unit 8	Serious alarm in progress in slave unit 8	Slave unit in alarm state not considered by the master in the master/slave functions	Check the slave unit in alarm state and check the alarm in progress	A	Yes
79	Alarm on slave unit 9	Serious alarm in progress in slave unit 9	Slave unit in alarm state not considered by the master in the master/slave functions	Check the slave unit in alarm state and check the alarm in progress	A	No

ID	Description	Cause	Impact	Resolution	Reset (*)	Relay
80	Slave unit 1 offline	Probable incorrect connection or disconnection of the master/slave line	Slave unit in alarm state not considered by the master in the master/slave functions	Check the connection of the master/slave line or the parameters of the **NET** unit	A	No
81	Slave unit 2 offline	Probable incorrect connection or disconnection of the master/slave line	Slave unit in alarm state not considered by the master in the master/slave functions	Check the connection of the master/slave line or the parameters of the **NET** unit	A	No
82	Slave unit 3 offline	Probable incorrect connection or disconnection of the master/slave line	Slave unit in alarm state not considered by the master in the master/slave functions	Check the connection of the master/slave line or the parameters of the **NET** unit	A	No
83	Slave unit 4 offline	Probable incorrect connection or disconnection of the master/slave line	Slave unit in alarm state not considered by the master in the master/slave functions	Check the connection of the master/slave line or the parameters of the **NET** unit	A	No
84	Slave unit 5 offline	Probable incorrect connection or disconnection of the master/slave line	Slave unit in alarm state not considered by the master in the master/slave functions	Check the connection of the master/slave line or the parameters of the **NET** unit	A	No
85	Slave unit 6 offline	Probable incorrect connection or disconnection of the master/slave line	Slave unit in alarm state not considered by the master in the master/slave functions	Check the connection of the master/slave line or the parameters of the **NET** unit	A	No
86	Slave unit 7 offline	Probable incorrect connection or disconnection of the master/slave line	Slave unit in alarm state not considered by the master in the master/slave functions	Check the connection of the master/slave line or the parameters of the **NET** unit	A	No
87	Slave unit 8 offline	Probable incorrect connection or disconnection of the master/slave line	Slave unit in alarm state not considered by the master in the master/slave functions	Check the connection of the master/slave line or the parameters of the **NET** unit	A	No
88	Slave unit 9 offline	Probable incorrect connection or disconnection of the master/slave line	Slave unit in alarm state not considered by the master in the master/slave functions	Check the connection of the master/slave line or the parameters of the **NET** unit	A	No
89	Slave alarm offline	Probable incorrect connection or disconnection of the master/slave line	Slave unit in alarm state not considered by the master in the master/slave functions	Check the connection of the master/slave line or the parameters of the **NET** unit	A	No
90	Alarm from master	Serious alarm in progress in master unit	The master unit is blocked, the slave devices work independently with their own parameters	Check the master unit and check the alarm in progress	A	No

ID	Description	Cause	Impact	Resolution	Reset (*)	Relay
91	Evaporator defrost timeout alarm	Evaporator defrost ended due to maximum time and not due to temperature	Visual indication only	Check the defrost end value **dT1** or the maximum duration value **dS1**	A	No
92	Evaporator 2 defrost timeout alarm	Evaporator defrost ended due to maximum time and not due to temperature	Visual indication only	Check the defrost end value **dT2** or the maximum duration value **dS2**	A	No
93	Sequential defrost skipped on slave 1 alarm	Defrost cycle skipped on slave 1 during the sequential defrost stage due to missing conditions for longer than **dT1** + **tdc** + **dt** + 1 minute (parameters of the master)	Defrost not performed, only visual indication	Check the conditions of the unit and if necessary, check parameter **dT1**	A	No
94	Sequential defrost skipped on slave 2 alarm	Defrost cycle skipped on slave 2 during the sequential defrost stage due to missing conditions for longer than **dT1** + **tdc** + **dt** + 1 minute (parameters of the master)	Defrost not performed, only visual indication	Check the conditions of the unit and if necessary, check parameter **dT1**	A	No
95	Sequential defrost skipped on slave 3 alarm	Defrost cycle skipped on slave 3 during the sequential defrost stage due to missing conditions for longer than **dT1** + **tdc** + **dt** + 1 minute (parameters of the master)	Defrost not performed, only visual indication	Check the conditions of the unit and if necessary, check parameter **dT1**	A	No
96	Sequential defrost skipped on slave 4 alarm	Defrost cycle skipped on slave 4 during the sequential defrost stage due to missing conditions for longer than **dT1** + **tdc** + **dt** + 1 minute (parameters of the master)	Defrost not performed, only visual indication	Check the conditions of the unit and if necessary, check parameter **dT1**	A	No
97	Sequential defrost skipped on slave 5 alarm	Defrost cycle skipped on slave 5 during the sequential defrost stage due to missing conditions for longer than **dT1** + **tdc** + **dt** + 1 minute (parameters of the master)	Defrost not performed, only visual indication	Check the conditions of the unit and if necessary, check parameter **dT1**	A	No

ID	Description	Cause	Impact	Resolution	Reset (*)	Relay
98	Sequential defrost skipped on slave 6 alarm	Defrost cycle skipped on slave 6 during the sequential defrost stage due to missing conditions for longer than **dT1** + **tdc** + **dt** + 1 minute (parameters of the master)	Defrost not performed, only visual indication	Check the conditions of the unit and if necessary, check parameter **dT1**	A	No
99	Sequential defrost skipped on slave 7 alarm	Defrost cycle skipped on slave 7 during the sequential defrost stage due to missing conditions for longer than **dT1** + **tdc** + **dt** + 1 minute (parameters of the master)	Defrost not performed, only visual indication	Check the conditions of the unit and if necessary, check parameter **dT1**	A	No
100	Sequential defrost skipped on slave 8 alarm	Defrost cycle skipped on slave 8 during the sequential defrost stage due to missing conditions for longer than **dT1** + **tdc** + **dt** + 1 minute (parameters of the master)	Defrost not performed, only visual indication	Check the conditions of the unit and if necessary, check parameter **dT1**	A	No
101	Sequential defrost skipped on slave 9 alarm	Defrost cycle skipped on slave 9 during the sequential defrost stage due to missing conditions for longer than **dT1** + **tdc** + **dt** + 1 minute (parameters of the master)	Defrost not performed, only visual indication	Check the conditions of the unit and if necessary, check parameter **dT1**	A	No
102	Synchronized defrost alarm skipped	Synchronized defrost skipped due to missing conditions of all the slave devices for longer than **dT1** + **tdc** + **dt** + 1 minute (parameters of the master)	Defrost not performed, only visual indication	Check the conditions of the units and if necessary, check parameter **dT1**	A	No
103	General alarm 1	Alarm from alarm 1 general function	Visual indication only	Check the configuration parameters in the **GEF** - **ALF** group	A	No
104	General alarm 2	Alarm from alarm 2 general function	Visual indication only	Check the configuration parameters in the ***GEF*** - ***ALF*** group	A	No
105	Slave unit general offline	At least one slave unit is offline	Visual indication only	Check the connection of the master/slave line or the parameters of the **NET** unit	A	No

ID	Description	Cause	Impact	Resolution	Reset (*)	Relay
106	General alarm on slave unit	At least one slave unit has a serious alarm	Visual indication only	Check the slave unit in alarm state and check the alarm in progress	A	No
107	Sequential defrost skipped on slave unit general alarm	At least one slave unit has skipped the sequential defrost	Visual indication only	Check the conditions of the unit and if necessary, check parameter **dT1**	A	No
108	Smart Defrost Error Alarm	Smart Defrost was unable to complete the sampling stage for a consecutive number of times equal to the parameters 2x 3Sd + Sd6 or the safety defrost occurred for a number higher than Sd3 in a time less than Sd2	Visual indication only for 24 hours	Check: • the state of the coldroom and the positioning of the end defrost probe • the Smart Defrost function parameters To re-enable the Smart Defrost function, the electronic control must be restarted.	A	No

11. Appendix

This section includes the following topics:

11.1 Decommissioning 113
11.2 Technical features 115
11.3 Basic configurations 118
11.4 Attachments 119
11.5 Time zones 119

11.1 Decommissioning

11.1.1 Required skills

	Mechanical maintenance engineer
	Electrical maintenance engineer
	Driver

11.1.2 Safety

	Always wear protective goggles, footwear, protective gloves and tight-fitting clothes.

DANGER! Explosion/Burn. Presence of flammable gas. During installation, adopt all the precautions required by legislation in force.
Crushing. Always use lifting equipment and accessories of adequate capacity for the load to be lifted and follow the lifting warnings given in this instruction manual.

Falling from above. Always use adequate means and accessories. Provide safe access to the installation area. Follow the warnings given in this instruction manual.

Electrocution. Always use adequate means and accessories. Follow the warnings given in this instruction manual.

Cut or abrasion. Wear the personal protective equipment.

11.1.3 Warnings

Environmental contamination. Follow the regulations in force regarding the disposal of polluting materials.

11.1.4 Dismantling the machine

If the machine is to be relocated or has reached the end of its technical and operational life cycle, it must be dismantled. Dismantling procedure

1. Disconnect the energy sources.
2. Disassemble the various components.
3. If necessary, transport and temporarily store the machine in a suitable place.

11.1.5 Scrapping the machine

If the machine has reached the end of its technical and operational life cycle, it must be scrapped. Correct recycling will help prevent potentially adverse consequences for the environment and people.

Scrap the machine by disassembling the various components, separating them according to the material they are made of and take them to the collection facilities indicated by the government or local public bodies.

11.2 Technical features

11.2.1 Dimensions

The dimensions vary with the power and are identified with the dimensions of the condensing fan unit (see "Code legend" on page 7).

11.2.2 Technical data applications in medium temperature

		BE-Wx251MA10Pxx	BE-Wx251MA20Pxx	BE-Wx301MA30Pxx	BE-Wx301MA40Pxx	BE-Wx302MA50Pxx	BE-Wx352MA60Pxx	BE-Wx352MA70Pxx	BE-Wx352MA80Pxx
Size	-	1x250		1x300			1x350		
Coldroom Temperature	°C	from -5 to 10							
Dispersed Thermal Power *	W	1448	1959	2542	3166	3861	4806	5140	6154
Absorption **	W	540	780	990	1200	1490	1870	2000	2440
	A	2.9	4.3	5.4	6.5	8,1 (230/1/50) 2,7 (400/3/50)	10,2 (230/1/50) 3,4 (400/3/50)	10,9 (230/1/50) 3,6 (400/3/50)	13,2 (230/1/50) 4,4 (400/3/50)
Working Ambient Temperature	°C	from +5 to +43							
Storage Temperature	°C	from -25 to +55							
Refrigerant	-	R290							
Refrigerant Charge	kg	≤ 0.150 per circuit							
GWP	-	3							
Equivalent CO_2	t CO_2	≤ 0.45				≤ 0.9			
PS Hp	bar (g)	24							
PS Lp	bar (g)	14.6							
PED Category	-	Article 4.3							
Refrigeration circuit	-	Sealed hermetically							
Expansion unit	-	Mechanical thermostatic valve							
Defrost Type	-	Hot Gas							
Compressor Type	-	Hermetic							
Compressor Displacement	cm^3	12.1	16.8	22.4	27.8	2 x 16.8	2 x 20.4	2 x 22.4	2 x 27.8
Power supply	V/-/Hz	230/1/50				230/1/50 or 400/3/50			
Industrial plug 2P + E	A	16							32
Industrial plug 3P + N + E	A	-				16			
External protection circuit breaker (curve D)	A	10			16	16 (230/1/50) 10 (400/3/50)			20 (230/1/50) 16 (400/3/50)
Protection Rating	-	IP 20							
Power cable length	m	2.5							
Coldroom light cable length	m	5							
Door switch cable length	m	2.5							
Door heater cable length	m	2.5							

		BE-Wx251MA10Pxx	BE-Wx251MA20Pxx	BE-Wx301MA30Pxx	BE-Wx301MA40Pxx	BE-Wx302MA50Pxx	BE-Wx352MA60Pxx	BE-Wx352MA70Pxx	BE-Wx352MA80Pxx
BMS cable length	m	5							
Noise (10 m)***	dB(A)	31.6	31.4	35.5	36.5	34.3	42.7	42.5	43.0
Condenser-fan number and diameter	-	1x254		1x300			1x350		
Condenser air flow rate	m3/h	600		1200			2540		
Evaporator-fan number and diameter	-	1x200		2x200			1x350		
Evaporator air flow rate	m3/h	500		1000			2740		
Evaporator air throw	m	6.5					8		
Machine dimensions (LxWxH)	mm	421x876x728		671x976x828			711x1255x828		
Total weight WT	kg	58	60	88	89	105	134	134	135
Total weight WT without packaging	kg	46	48	66	67	83	105	105	106
Total weight WS	kg	56	58	86	86	103	131	131	132
Total weight WS without packaging	kg	45	47	64	64	81	102	102	103

Note (*): *values measured at ambient temperature = 30 °C and coldroom temperature NT = 0 °C LT = -20 °C.*

Note (**): *values measured at condensing temperature = 50 °C and evaporating temperature NT = -10 °C LT = -30 °C.*

Note (***): *the sound pressure levels derive from the sound power level. Conjecturing a hemispherical measuring surface, in free field, without effects of detectable reflections and taking the omnidirectional source into account. The machine to be measured is considered to be placed on the ground with the floor as the only reflective surface.*

11.2.3 Technical data applications in low temperature

		BE-Wx251LA10Pxx	BE-Wx251LA20Pxx	BE-Wx301LA30Pxx	BE-Wx301LA40Pxx	BE-Wx302LA50Pxx	BE-Wx352LA60Pxx	BE-Wx352LA70Pxx
Size	-	1x250		1x300			1x350	
Coldroom Temperature	°C	from -25 to -15						
Dispersed Thermal Power *	W	1215	1676	1893	2342	2726	3842	4747
Absorption **	W	690	910	940	1180	1300	1800	2300
	A	3.8	5	5.1	2.1	7,1 (230/1/50) 2,3 (400/3/50)	9,8 (230/1/50) 3,3 (400/3/50)	4.2
Working Ambient Temperature	°C	from +5 to +43						
Storage Temperature	°C	from -25 to +55						
Refrigerant	-	R290						
Refrigerant Charge	kg	≤ 0.150 per circuit						
GWP	-	3						
Equivalent CO_2	t CO_2	≤ 0.45				≤ 0.9		
PS Hp	bar (g)	24						
PS Lp	bar (g)	14.6			11.4	14.6		11.4
PED Category	-	Article 4.3			1	Article 4.3		1
Refrigeration circuit	-	Sealed hermetically						
Expansion unit	-	Mechanical thermostatic valve						
Defrost Type	-	Hot Gas						

		BE-Wx251LA10Pxx	BE-Wx251LA20Pxx	BE-Wx301LA30Pxx	BE-Wx301LA40Pxx	BE-Wx302LA50Pxx	BE-Wx352LA60Pxx	BE-Wx352LA70Pxx
Compressor Type	-	Hermetic						
Compressor Displacement	cm^3	18.7	27.8	27.8	38	2 x 22.4	2 x 27.8	2 x 38
Power supply	V/-/Hz	230/1/50			400/3/50	230/1/50 or 400/3/50		400/3/50
Industrial plug 2P + E	A	16					32	16
Industrial plug 3P + N + E	A	-			16			
External protection circuit breaker (curve D)	A	10	16		10	16 (230/1/50) 10 (400/3/50)	20 (230/1/50) 16 (400/3/50)	16
Protection Rating	-	IP 20						
Power cable length	m	2.5						
Coldroom light cable length	m	5						
Door switch cable length	m	2.5						
Door heater cable length	m	2.5						
BMS cable length	m	5						
Noise (10 m)***	dB(A)	31.3	32.8	32.8	35.5	35.3	42.3	42.5
Condenser-fan number and diameter	-	1x254		1x300			1x350	
Condenser air flow rate	m^3/h	600		1200			2540	
Evaporator-fan number and diameter	-	1x200		2x200			1x350	
Evaporator air flow rate	m^3/h	500		1000			2740	
Evaporator air throw	m	6.5					8	
Machine dimensions (LxWxH)	mm	421x876x728		671x976x828			711x1255x828	
Total weight WT	kg	60	68	89	93	118	134	143
Total weight WT without packaging	kg	48	56	67	71	96	105	114
Total weight WS	kg	58	66	86	90	115	130	139
Total weight WS without packaging	kg	46	54	64	68	93	101	110

Note (*): *values measured at ambient temperature = 30 °C and coldroom temperature NT = 0 °C LT = -20 °C.*

Note (**): *values measured at condensing temperature = 50 °C and evaporating temperature NT = -10 °C LT = -30 °C.*

Note (***): *the sound pressure levels derive from the sound power level. Conjecturing a hemispherical measuring surface, in free field, without effects of detectable reflections and taking the omnidirectional source into account. The machine to be measured is considered to be placed on the ground with the floor as the only reflective surface.*

11.3 Basic configurations

The table shows the complete list of parameters with the relative settings for each of the four basic configurations.

Parameters	BEST WALL	BEST WALL	BEST WALL	BEST WALL
	1 COMPRESSOR NT	1 COMPRESSOR LT	2 COMPRESSORS NT	2 COMPRESSORS LT
UnG	7	7	7	7
CoM	1	1	1	1
PVt	0	0	0	0
PVM	1	1	1	1
Set	0	-20	0	-20
SPr	0.8	0.8	0.8	0.8
dPr	0.4	0.4	0.4	0.4
LPr	0	0	0	0
SCO	12	12	12	12
dCO	2	2	2	2
dit	6	6	6	6
dt1	5	5	5	5
dS1	15	15	15	15
FPb	2	2	2	2
FS1	10	-10	10	-10
FS2	10	-10	10	-10
Fdt	1	3	1	3
dFd	0	0	0	0
P7	2	2	2	2
PL1	-20	-40	-20	-40
PM1	10	-10	10	-10
A03	99.9	99.9	99.9	99.9
A07	50	50	50	50
A11	-50	-50	-50	-50
A58	10	10	10	10
A62	5	5	5	5
A63	0	0	0	0
A65	1.4	0.3	1.4	0.3
A66	0.2	0.1	0.2	0.1

11.4 Attachments

11.4.1 Documents attached to the manual

- Declaration of conformity
- Wiring diagram of the packaged unit
- Refrigerating diagram

11.5 Time zones

11.5.1 Time zones table

Time zone	Territory
UTC -12:00	Baker Island, Howland Island
UTC -11:00	Jarvis Island, Midway Atoll, Niue, Palmyra, American Samoa, Kingman Reef
UTC -10:00	Johnston Atoll, Cook Islands, French Polynesia (Society Islands including Tahiti Islands, Tuamotu Islands, Tubuai Islands), United States of America (Hawaii), United States of America (Aleutian Islands of Alaska)*
UTC -9:00	French Polynesia (Gambier Islands), United States of America (Alaska*)
UTC -8:00	Clipperton, Canada (British Columbia*, Yukon*), Mexico (Baja California State*), Pitcairn Islands, United States of America (California*, Idaho (northern)*, Nevada* (excluding West Wendover), Oregon (excluding Malheur County)*, Washington State*)
UTC -7:00	Canada (Alberta*, Northwest Territories*, Nunavut (mountains)*), Mexico (Baja California Sur, Chihuahua, Nayarit, Sinaloa, Sonora*), United States of America (Arizona (Navajo state follows the daylight saving time), Colorado*, Idaho (southern)*, Montana*, Nebraska (west)*, Nevada (West Wendover), New Mexico*, North Dakota (west)*, Oregon (Malheur County)*, South Dakota (west)*, Texas* (west), Utah*, Wyoming*)
UTC -6:00	Mexico (Mexico City, Cancún, Yucatán, Chiapas and other states not mentioned)*, Belize, Canada (Manitoba*, Nunavut (Southampton Island), Nunavut (central)*, Ontario (west)*, Saskatchewan), Costa Rica, Ecuador (Galapagos Islands), El Salvador, Guatemala, Honduras, Nicaragua, United States of America (Alabama*, Arkansas*, Illinois*, Indiana*, Iowa*, Florida (west)*, Kansas*, Kentucky (west)* , Louisiana*, Minnesota*, Mississippi*, Missouri*, Nebraska (east)*, North Dakota*, Oklahoma*, South Dakota (east)*, Tennessee (central and west)*, Texas* (central and east), Wisconsin*)
UTC -5:00	Bahamas, Canada (East Nunavut*, Ontario*, Quebec*), Chile (Easter Island), Colombia, Cuba*, Ecuador, Jamaica, Haiti, Cayman Islands, Turks and Caicos Islands*, Panama, Peru, United States of America (Connecticut*, Delaware*, District of Columbia*, Florida (east and central)*, Georgia*, Indiana (most of the state), Kentucky (east and central)*, Maine*, Maryland*, Massachusetts*, Michigan*, New Hampshire*, New Jersey*, New York*, North Carolina*, Ohio*, Pennsylvania*, Rhode Island*, South Carolina*, Tennessee (east)*, Vermont*, Virginia*, West Virginia*)
UTC -4:00	Anguilla, Antigua and Barbuda, Bermuda, Bolivia, Brazil (Amazonas, Mato Grosso*, Mato Grosso do Sul*, Pará (western), Rondônia, Roraima), Dutch Caribbean, Chile (except Easter Island and Magellan and Chilean Antarctica), Canada (Labrador*, New Brunswick*, Nova Scotia*, Prince Edward Island*), Dominica, Grenada, Guadeloupe, Guyana, Virgin Islands, Martinique, Montserrat, Paraguay*, Puerto Rico, Dominican Republic, Saint Kitts and Nevis, Saint Vincent and the Grenadines, Saint Lucia, Trinidad and Tobago, Venezuela
UTC -3:00	Argentina, Brazil (Alagoas, Amapá, Bahia*, Ceará, Distrito Federal*, Espírito Santo*, Goiás*, Maranhão, Minas Gerais*, Pará, Paraíba, Paraná*, Pernambuco, Piauí, Rio de Janeiro*, Rio Grande do Norte , Rio Grande do Sul*, Santa Catarina*, São Paulo*, Sergipe, Tocantins*), Chile (Region of Magellan and Chilean Antarctica), Falkland Islands, Greenland, French Guiana*, Saint-Pierre and Miquelon*, Suriname , Uruguay
UTC -2:00	Brazil (Fernando de Noronha), United Kingdom (South Georgia)
UTC -1:00	Cape Verde, Azores*

Time zone	Territory
UTC +0:00 **Universal time coordinated**	Burkina Faso, Canary Islands* (Spain), Ivory Coast, Gambia, Ghana, Guinea, Guinea-Bissau, Ireland*, Iceland, Faroe Islands*, Liberia, Mali, Mauritania, North Pole, Portugal*, United Kingdom*, Sant'Elena, São Tomé and Príncipe, Senegal, Sierra Leone, Togo
UTC +1:00	Albania*, Andorra*, Angola, Austria*, Belgium*, Benin, Bosnia and Herzegovina*, Cameroon, Chad, Vatican City*, Croatia*, Denmark*, France*, Gabon, Germany*, Gibraltar*, Equatorial Guinea, Italy*, Svalbard and Jan Mayen Islands*, Libya, Liechtenstein*, Luxembourg*, North Macedonia*, Malta*, Morocco, Principality of Monaco*, Montenegro*, Niger, Nigeria, Norway*, Netherlands*, Poland*, Czech Republic*, Central African Republic, Republic of Congo, Democratic Republic of Congo (Kinshasa, Bandundu, Central Congo Province, Equator Province), San Marino*, Serbia*, Slovakia*, Slovenia*, Spain*, Sweden*, Switzerland*, Tunisia*, Hungary*
UTC +2:00	Botswana, Bulgaria*, Burundi, Cyprus* (including Northern Cyprus), Egypt*, Estonia*, Finland*, Jordan*, Greece*, Israel*, Latvia*, Lesotho, Lebanon*, Lithuania*, Malawi, Moldova*, Mozambique, Namibia, Palestine*, Democratic Republic of Congo (Western Kasai, Eastern Kasai, Katanga, North Kivu, South Kivu, Maniema, Eastern Province), Romania*, Russia (Zone 1*, including Kaliningrad), Rwanda, Syria*, South Africa, Sudan, Swaziland, Ukraine*, Zambia, Zimbabwe
UTC +3:00	Saudi Arabia, Bahrain, Belarus*, Comoros, Eritrea, Ethiopia, Djibouti, Iraq*, Kenya, Kuwait, Madagascar, Mayotte, Qatar, Russia (Zone 2*, includes Moscow and St. Petersburg; this time zone also applies to all Russia railways), Somalia, South Sudan, Tanzania, Turkey*, Uganda, Yemen
UTC +4:00	Armenia, Azerbaijan, United Arab Emirates, Georgia, Mauritius*, Oman, Reunion, Russia (Zone 3*), Seychelles
UTC +5:00	Kazakhstan (West)*, Maldives, Pakistan, Russia (Zone 4*, includes Ekaterinburg and Perm'), Tajikistan, Turkmenistan, Uzbekistan
UTC +6:00	Bangladesh, Bhutan, (eastern) Kazakhstan, Kyrgyzstan, Russia (Zone 5*, includes Omsk)
UTC +7:00	Cambodia, Indonesia (western), Christmas Island (Australia), Laos, Russia (Zone 6*, includes Novosibirsk, Kemerovo, Krasnoyarsk, Kyzyl), Thailand, Vietnam
UTC +8:00	Australia (Western Australia), Brunei, China (mainland), Philippines, Hong Kong, Indonesia (central), Macao, Malaysia, Mongolia, Russia (Zone 7*), Singapore, Taiwan Please note that all of China has the same time, which makes this time zone exceptionally wide. At the western end of China the sun reaches its zenith at 3pm, at the eastern end at 11am.
UTC +9:00	South Korea (KST – Korean Standard Time), North Korea (NKST – North Korean Standard Time), Japan (JST – Japanese Standard Time), Indonesia (eastern), Palau, Russia (Zone 8*, includes Yakutsk), Timor East
UTC +10:00	The United States has officially designated this time zone as Chamorro Standard Time. , Australia (Australian Capital Territory*, New South Wales* (except Broken Hill), Queensland, Victoria*, Tasmania*), Guam, Northern Mariana Islands, Papua New Guinea, Russia (Zone 9*, includes Vladivostok), Federated States of Micronesia (Yap and Chuuk)
UTC +11:00	Solomon Islands, New Caledonia, Russia (Zone 10*), Federated States of Micronesia (Kosrae and Pohnpei), Vanuatu
UTC +12:00	Fiji*, Wake Island, Marshall Islands, Nauru, New Zealand (Aotearoa)*, Antarctica, Russia (Zone 11), Tuvalu, Wallis and Futuna
UTC +13:00	Fiji*, Wake Island, Marshall Islands, Nauru, New Zealand (Aotearoa)*, Antarctica, Russia (Zone 11), Tuvalu, Wallis and Futuna
UTC +14:00	Kiribati (Line Islands or Southern Sporades)

RIVACOLD srl
Montecchio - via Sicilia, 7
61022 Vallefoglia (PU)
Italia

www.rivacold.com
info@rivacold.com
Tel. +39 0721 919911
Fax +39 0721 490015

BEST W R290
© 2021 RIVACOLD srl